DRAWING SIZE A

APPLICATION		REVISIONS			
NEXT ASSY	USED ON	LTR	DESCRIPTION	DATE(YR-MO-DA)	APPROVED
B6147114	PISTOL,M911A1 PISTOL,M911A1 NATL MATCH	F	REDRAWN W/CHANGE NOR G7S2012/87-03-18	90-10-23	HJS

NOTES:
1. STEEL, CMPSN 1117: ASTM-A108.
2. BREAK EDGES .015 MAX.

3. FINISH 125/
4. MIL-W-13855 APPLIES.

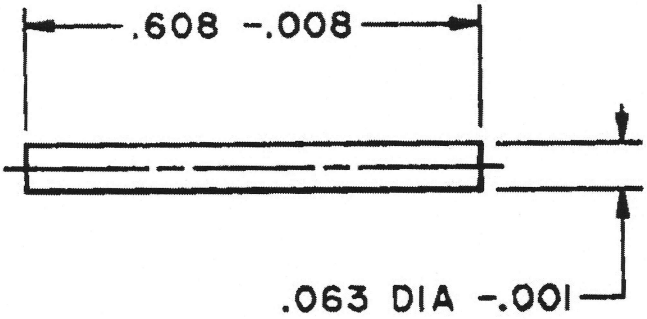

CURRENT DESIGN ACTIVITY CAGE CODE 19200
U.S. ARMY
ARMAMENT RESEARCH, DEVELOPMENT AND ENGINEERING CENTER
PICATINNY ARSENAL, NEW JERSEY 07806-5000

THIS DRAWING HAS BEEN GENERATED ON A CAD SYSTEM LOCATED AT ARDEC, PICATINNY ARSENAL, N.J. CHANGES MUST BE INCORPORATED VIA THIS SYSTEM.

PART NO. 5013216

DO NOT SCALE DRAWING	CONTRACT NUMBER	DEPT OF THE ARMY SPRINGFIELD ARMORY SPRINGFIELD, MASS
PMIC	CONTRACTOR	
UNLESS OTHERWISE SPECIFIED DIMENSIONS ARE IN INCHES TOLERANCES ON DECIMAL FRACTION 2 PL ± ± 3 PL ±	DRAWN BY C.S.S. / DATE(YR-MO-DA) 28-05-01	PIN, MAGAZINE BASE
THIRD ANGLE PROJECTION	CHECKER A.J.S. / ENGINEER H.E.S.	
	DRAWING APPROVAL V. A. LUUKKONEN	SIZE A / CAGE CODE 19205 / 5013216
MATL ENGR / CADDS REV A 263	DESIGN APPROVAL S. C. SHULTZ	SCALE 4/1 / UNIT WT. .0004 LB / SHEET 1 OF 1

SMCAR FORM 68, 1 NOV 88(TEMP) REPLACES SMCAR FORM 68, 1 JUL 87(TEMP) WHICH MAY BE USED UNTIL EXHAUSTED

REVISIONS				
ZONE	LTR	DESCRIPTION	DATE (YR MO DA)	APPROVE
	G	REDRAWN W/CHANGE NOR W4S2049/840719 (ECP W4S2067/841224)	870621	ORFI

NOTES:

1. STRESS RELIEVE AT 435° ± 10°F FOR 20 MINUTES AFTER FORMING.
2. MANUFACTURE IN ACCORDANCE WITH MIL-S-13572 TYPE I, GRADE A, EXCEPT DO NOT COMPRESS TO SOLID HEIGHT.
3. MATERIAL: MUSIC WIRE, STEEL, SPEC QQ-W-470.

INSIDE DIA. FREE, NOT LESS THAN _____ .091
DIAMETER OF WIRE(APPROX) _____ .026
OUTSIDE DIA. SOLID, NOT MORE THAN ____ .149
FREE LENGTH(APPROX) _____ .708
ACTIVE COILS _____ 11 REF
TOTAL COILS _____ 13 REF
DIRECTION OF HELIX _____ RH
LOAD AT COMPRESSED LENGTH OF .550 (BASIC)= 5.7 LB± 0.5 LB
LOAD AT COMPRESSED LENGTH OF.456 (BASIC) = 8.5 LB± 0.7 LB

SPECIAL DATA
HOLE DIA INTO WHICH SPRING FITS FREELY ___ .152 MIN

SOLID LENGTH _____ .364 MAX
TYPE OF ENDS _____ PLAIN (OPEN ENDS NOT GROUND)
REDUCE ID OF LAST COIL ON BOTH ENDS TO .085 DIA-.010

CURRENT DESIGN ACTIVITY CAGE CODE 19200
U.S. ARMY
ARMAMENT RESEARCH, DEVELOPMENT AND ENGINEERING CENTER
PICATINNY ARSENAL, NEW JERSEY 07806-5000

THIS DRAWING HAS BEEN GENERATED ON A CAD SYSTEM LOCATED AT ARDEC, PICATINNY ARSENAL, N.J. CHANGES MUST BE INCORPORATED VIA THIS SYSTEM.

PART NO. 5013217

PMIC		
MECHANICAL PROPERTIES		
YP		
TS		
EL2		
RA		
BH		
RH		

NEXT ASSY	USED ON
F7791205	PISTOL, M9IIA1
	NATL MATCH
F7265655	PISTOL, M9IIA1
F12006306	PISTOL, M15
APPLICATION	

DO NOT SCALE DRAWING
UNLESS OTHERWISE SPECIFIED DIMENSIONS ARE IN INCHES
TOLERANCES ON
DECIMAL: 2 PL ± ; 3 PL ±
FRACTION: ±

THIRD ANGLE PROJECTION

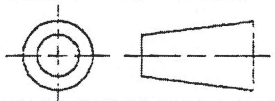

MATL ENGR
CADDS REV - 230

CONTRACT NUMBER
CONTRACTOR

DRAWN BY	DATE(YR-MO-DA)
E.R.C.	28-05-01
CHECKER M.E.K.	ENGINEER H.E.S.

DRAWING APPROVAL
V. A. LUUKKONEN
DESIGN APPROVAL
S. C. SHULTZ

DEPT OF THE ARMY
SPRINGFIELD ARMORY
SPRINGFIELD, MASS

SPRING, MAGAZINE CATCH

SIZE	CAGE CODE	
B	19205	5013217
SCALE	UNIT WT. .0007 LB	SHEET 1 OF 1

SMCAR FORM 66, 1 MAR 88(TEMP) REPLACES SMCAR FORM 66, 1 JUL 87(TEMP) WHICH MAY BE USED UNTIL EXHAUSTED

ORFI

NOTES:

1. MATERIAL: STEEL, CARBON: SAE 1018 THRU 1020, 1117: ASTM A108.
2. FINISH 125√ ALL OVER.
3. CARBURIZE AT 1575° TO 1600°F TO CASE DEPTH OF .003 TO .005. OIL QUENCH. TEMPER 450° FOR 20 MINUTES. HEAT TREATMENT METHOD IS FOR GUIDANCE, EXCEPT THAT CASE DEPTH AND HARDNESS REQUIREMENTS ARE MANDATORY AND TIME AT TEMPERATURE SHALL NOT BE REDUCED BELOW THAT SPECIFIED.
4. REMOVE ALL BURRS AND SHARP EDGES. .005 R MAX.
5. MIL-W-13855 APPLIES.
6. FINISH 5.3.1.2 OF MIL-STD-171.

REVISIONS

ZONE	LTR	DESCRIPTION	DATE (YR MO DA)	APPROVED
	F	REDRAWN W/CHANGE NOR W4S2049/840719 (ECP W4S2067/841224)	870621	ORFI

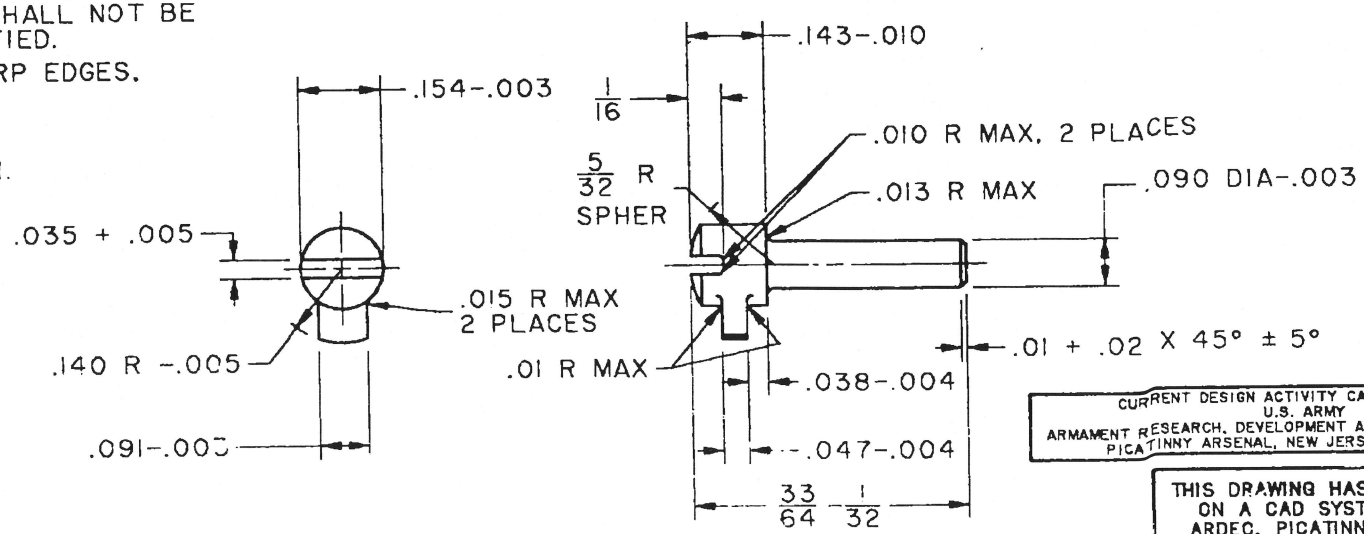

CURRENT DESIGN ACTIVITY CAGE CODE 19200
U.S. ARMY
ARMAMENT RESEARCH, DEVELOPMENT AND ENGINEERING CENTER
PICATINNY ARSENAL, NEW JERSEY 07806-5000

THIS DRAWING HAS BEEN GENERATED ON A CAD SYSTEM LOCATED AT ARDEC, PICATINNY ARSENAL, N.J. CHANGES MUST BE INCORPORATED VIA THIS SYSTEM.

PART NO. 5013218

PMIC			
MECHANICAL PROPERTIES			
YP			
TS			
EL2			
RA			
BH			
RH	FILE HARD		
		F7791205	PISTOL, M911A1
			NATL MATCH
		F7265655	PISTOL, M911A1
		B12006309	PISTOL, M15
		NEXT ASSY	USED ON
		APPLICATION	

DO NOT SCALE DRAWING

UNLESS OTHERWISE SPECIFIED DIMENSIONS ARE IN INCHES

TOLERANCES ON

DECIMAL	FRACTION
2 PL ±	±1/64
3 PL ±	

THIRD ANGLE PROJECTION

MATL ENGR

CADDS REV - 263

CONTRACT NUMBER

CONTRACTOR

DRAWN BY C.S.S.	DATE(YR-MO-DA) 28-05-01
CHECKER L.S.C.	ENGINEER H.E.S.
DRAWING APPROVAL V. A. LUUKKONEN	
DESIGN APPROVAL S. C. SHULTZ	

DEPT OF THE ARMY
SPRINGFIELD ARMORY
SPRINGFIELD, MASS

LOCK, MAGAZINE CATCH

SIZE	CAGE CODE	
B	19205	5013218
SCALE 4/1	UNIT WT. .0012 LB	SHEET 1 OF 1

ORFI

SMCAR FORM 66, 1 MAR 88(TEMP) REPLACES SMCAR FORM 66, 1 JUL 87(TEMP) WHICH MAY BE USED UNTIL EXHAUSTED

D5503839

REVISIONS		
SYM	DESCRIPTION	DATE
17		23MAY4
A	REDRAWN AND REVISED WAS "C" SIZE,	
	SEE EO SA26316	27NOV8
B	(B)SEE ERR HQR 30687-2	19 JUN
C	NOR W8S2007 780110	79102
D	NOR W4S2049 840719 (EC P W4S2100) 85-213	87-06-21

NOTES:

1. FINISH 125
2. ALL EDGES SHALL BE BROKEN .005+.010 UNLESS OTHERWISE SPECIFIED.
3. ALL UNSPECIFIED FILLET RADII TO BE .015-.010.
4. MATERIAL:
   A. STEEL: 1060, 1080 ASTM-A575, A576 AUSTENITIC FINE GRAIN SIZE. HEAT TREATMENT: HEAT AT 1450° TO 1500° F, OIL QUENCH. TEMPER 30 MINUTES AT HEAT TO HARDNESS SPECIFIED. HEAT TREATMENT METHOD IS FOR GUIDANCE EXCEPT THAT TEMPERING TIME SHALL NOT BE REDUCED BELOW THAT SPECIFIED.
   B. STEEL: 4140 4150 ASTM A 304 A 322 A 331 AUSTENITIC FINE GRAIN SIZE. HEAT TREATMENT: HEAT AT 1540° TO 1560° F. OIL QUENCH. TEMPER ONE HOUR AT 420° F MINIMUM TO HARDNESS SPECIFIED, OR HEAT AT 1540° TO 1560° F. ISOTHERMICALLY QUENCH IN NEUTRAL SALT. TEMPER TO HARDNESS SPECIFIED. HEAT TREATMENT METHOD IS FOR GUIDANCE, EXCEPT THAT TEMPERING TIME SHALL NOT BE REDUCED BELOW THAT SPECIFIED.
   C. INVESTMENT CASTING: IC4140 OR IC6150 CLASS I, GRADE A AND B SPEC. MIL-S-22141 MIL C 6021. HEAT TREATMENT: HEAT AT 1540° TO 1560° F. OIL QUENCH. TEMPER ONE HOUR AT 420° F MINIMUM TO HARDNESS SPECIFIED, OR HEAT AT 1540° TO 1560° F ISOTHERMICALLY QUENCH IN NEUTRAL SALT. TEMPER TO HARDNESS SPECIFIED. HEAT TREATMENT METHOD IS FOR GUIDANCE EXCEPT THAT TEMPERING TIME SHALL NOT BE REDUCED BELOW THAT SPECIFIED.
5. MIL-W-13855 APPLIES.
6. FINISH 5.3.1.2 OF MIL-STD 171, EXCEPT PARA 3.3,3.6.1 SHALL NOT APPLY. ALL SURFACES SHALL BE COATED WITH A FILM OF OIL. WEIGHT PER UNIT AREA SHALL NOT APPLY.

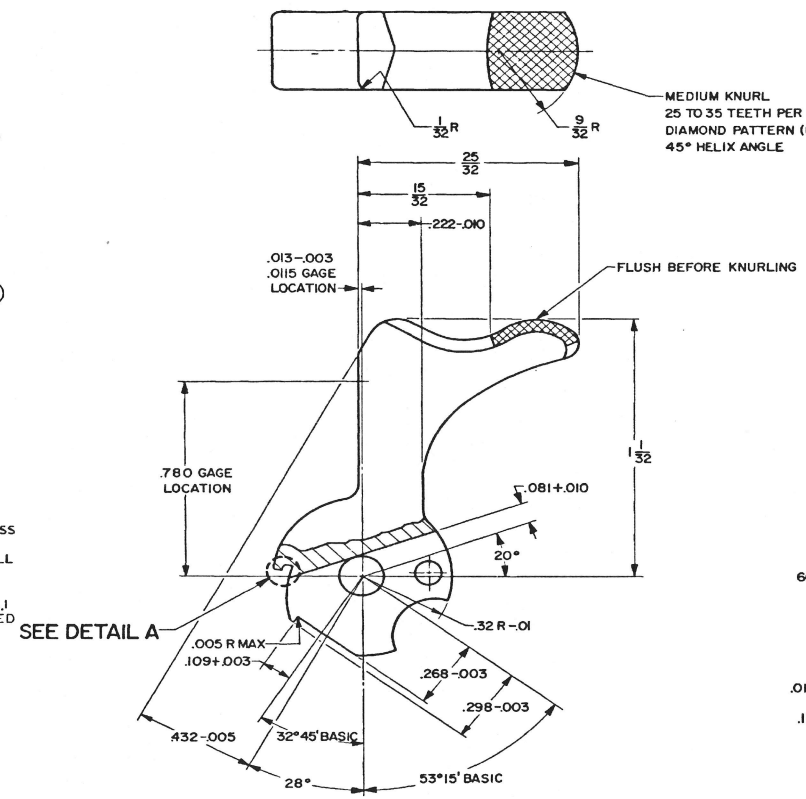

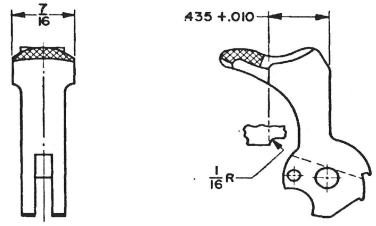

ALTERNATIVE METHOD
SCALE 2/1

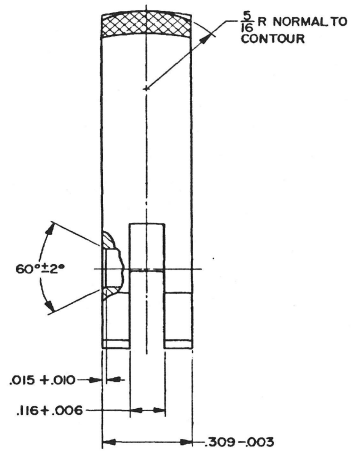

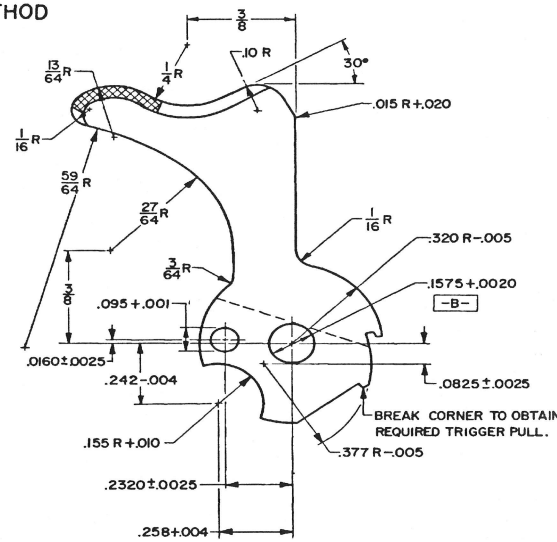

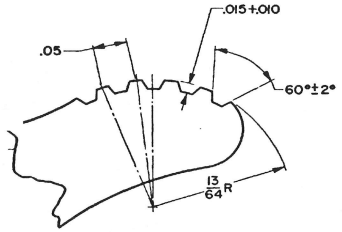

ALTERNATIVE METHOD TO KNURLING
SCALE 10/1

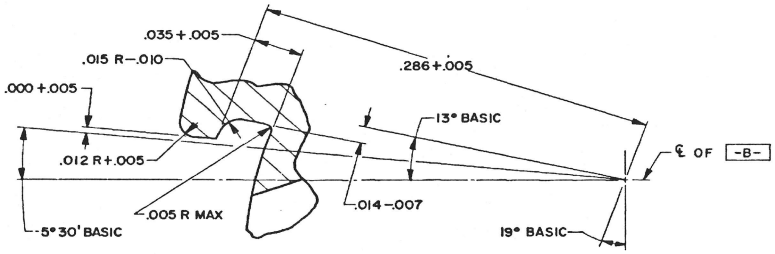

DETAIL A
SCALE 20/1

B12006319	PISTOL, M15		
F7265655	PISTOL, M9A1		
APPLICATION			
DO NOT	APPLY PART NO		

PHYSICAL PROPERTIES: YP, TS, EL, RA, BH, RH — C46 TO 52

UNLESS OTHERWISE SPECIFIED: DIMENSIONS ARE IN INCHES; TOLERANCES ON FRACTIONS ±1/64, DECIMALS ±.01, ANGLES ±1°

MATERIAL: SEE NOTE 4

HEAT TREATMENT:

FINAL PROTECTIVE FINISH: SEE NOTE 6

ORIGINAL DATE OF DRAWING 1 MAY 28

DRAFTSMAN ERC CHECKER K.T.M.

SUBMITTED: R.E. Stein

APPROVED BY ORDER OF THE ORD CORPS: R.C. Hale, LT COL

CURRENT DESIGN ACTIVITY CAGE CODE 19
U.S. ARMY
ARMAMENT RESEARCH, DEVELOPMENT AND ENGINEE
PICATINNY ARSENAL, NEW JERSEY 07806-

PART NO. 5503839

CAGE C 192

HAMMER

DEPT OF TH
SPRINGFIELI
SPRINGFIELI

SCALE 4/1 | UNIT WT .04 LB

DWG SIZE D | 550 | SHEET 1

RMH

REVISIONS			
SYM	DESCRIPTION	DATE	
10		23 MAY 66	
A	REDRAWN AND REVISED WAS "C" SIZE, SEE EO SA 26316	27 NOV 66	
B	(1-3) SEE EO RIA-13946	1-30-67	
C	(7) SEE ERR HQR 30687-2	19 JUN 73	
D	(2) SEE ERR HQR 50605	10 FEB 75	
E	NOR W8S8000 79-02-15	790503	
F	NOR WS5004A 840719 (ECP WS2047) 841214 (ECP WS5003) 850517.	870621	
G	ERR Z9Z1288T (ECP G9S2026/890626)	9010-16	
H	NOR G7S3116/870820	901211	GK

NOTES:

1. FINISH 125
2. MATERIAL: STEEL SAE 1060, 1080 ASTM A575, A576.
   B. STEEL SAE 4140, ASTM A 304, A322, A331. AUSTENITIC GRAIN 6 OR FINER.
   C. INVESTMENT CASTING IC4140, SPEC MIL-S-22141.
3. INSPECT CASTING PERMIL-STD-2175 CLASS 2, GRADE A AND B.
4. THIS METHOD FOR HORIZONTAL SERRATIONS, EACH SIDE; THE LOWEST SERRATION TO BE LOCATED 5/32 FROM TOP OF THUMB PIECE. CONTOUR OF THUMB PIECE IS IDENTICAL REGARDLESS OF METHOD USED. (B2)
5. MIL-W-13655 APPLIES. (C)
6. FINISH 5.3.1.2 OF MIL-STD-171.

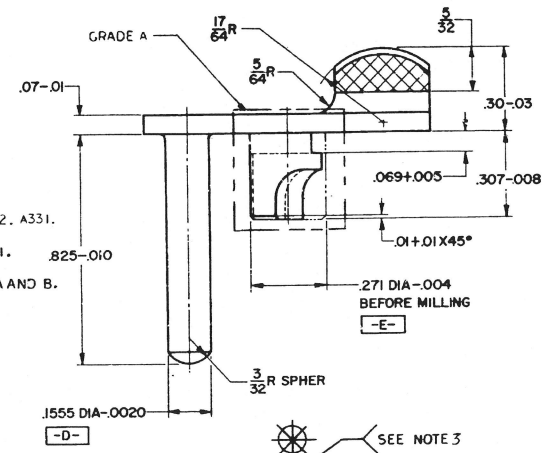

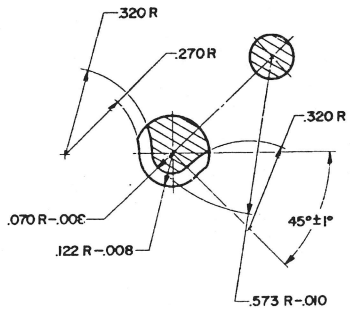

SECTION A-A

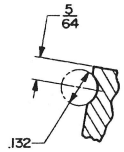

SECTION C-C

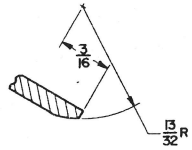

SECTION B-B

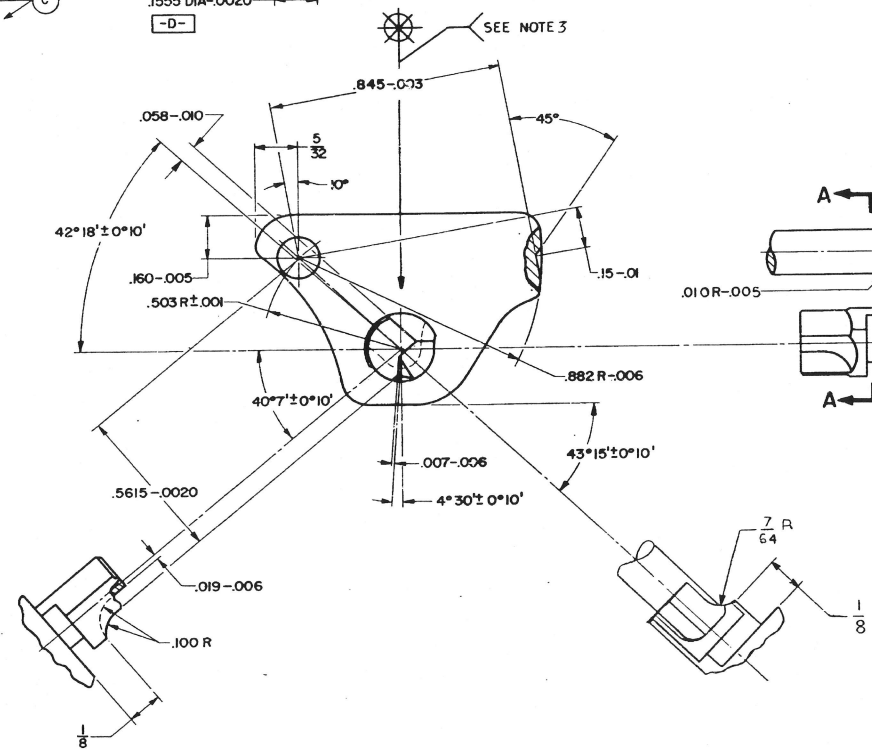

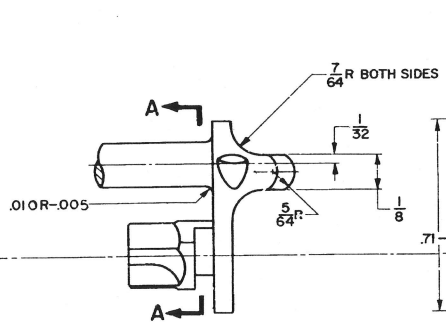

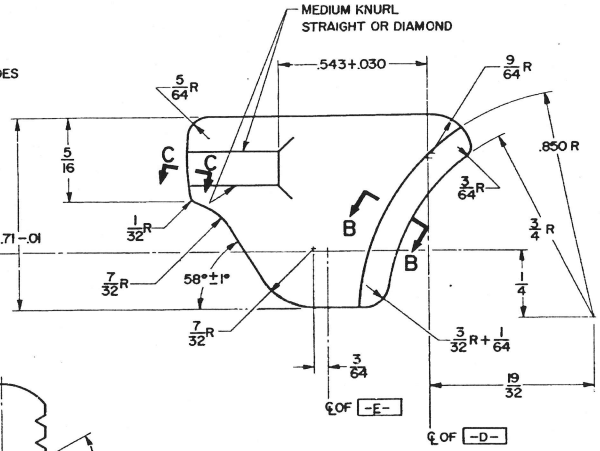

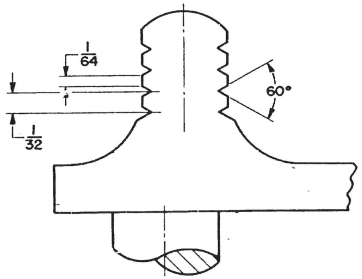

ALTERNATIVE METHOD TO KNURLING
SCALE 10/1
(SEE NOTE 4)
(B3)

D550384

812006320	PISTOL M15	PHYSICAL PROPERTIES	UNLESS OTHERWISE SPECIFIED DIMENSIONS ARE IN INCHES TOLERANCES ON FRACTIONS ±1/64 DECIMALS ±.010 ANGLES ±0°
F7791205	PISTOL MEDIUM	YP	
	MATL MATCH	TS	
F7265655	PISTOL MEDIUM	EL2	MATERIAL: SEE NOTE 2
		RA	
		BHN	HEAT TREATMENT: AUSTEMPER
HEAT AGAIN	MAP-UP	RH C44 TO 50	FINAL PROTECTIVE FINISH: SEE NOTE 6
APPLICATION			
DO NOT	APPLY PART NO.		

ORIGINAL DATE OF DRAWING 1 MAY 28
DRAFTSMAN F.C. CHECKER S.C.
TRACER R.A.P. CHECKER R.A.P.
SUBMITTED
APPROVED BY ORDER OF THE Chief of Ordnance J.C. Hela LT COL, ORD CORPS

CURRENT DESIGN ACTIVITY CAGE CODE 19200
U.S. ARMY
ARMAMENT RESEARCH, DEVELOPMENT AND ENGINEERING CENTER
PICATINNY ARSENAL, NEW JERSEY 07806-5000

PART NO. 5503840

CAGE CODE 19205

LOCK, SAFETY

DEPT OF THE ARMY
SPRINGFIELD ARMORY
SPRINGFIELD, MASS

SCALE 4/1 UNIT WT .02 LB

DWG SIZE D 550384

SHEET 1

RMH

REVISIONS			
SYM	DESCRIPTION	DATE	APPROVAL
E	NOR G0S3136 900810	901015	

REVISIONS	
SYM	DESCRIPTION
A	REDRAWN AND REVISED WAS "C" SIZE, SEE EO SA 26316
B	(3) SEE ERR HQR 30687-1
C	(2) SEE ERR HQR 50605
D	NOR W4S2049 84-07-19 (ECP W4S2067 84-12-24) (ECP W5S0141 85-12-18)

NOTES:
1. FINISH 125 ALL OVER.
2. STEEL, CARBON; SAE 1015 THRU 1025; 1117 THRU 1137; ASTM A108 OR STEEL; SAE 1015 THRU 1025; ASTM A 576.
3. MIL-W-13855 APPLIES.

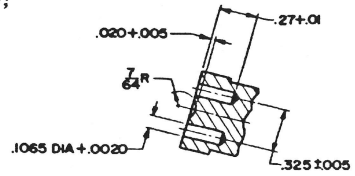

PARTIAL SECTION B-B

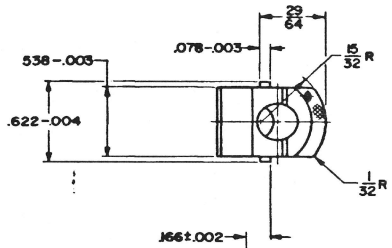

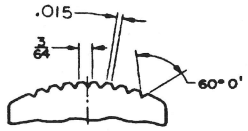

ALTERNATIVE METHOD TO KNURLING
SCALE 4/1

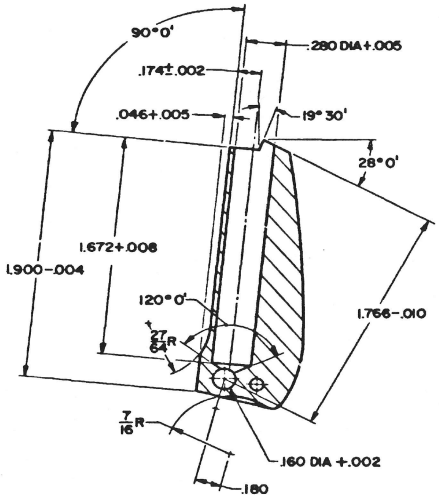

SECTION A-A

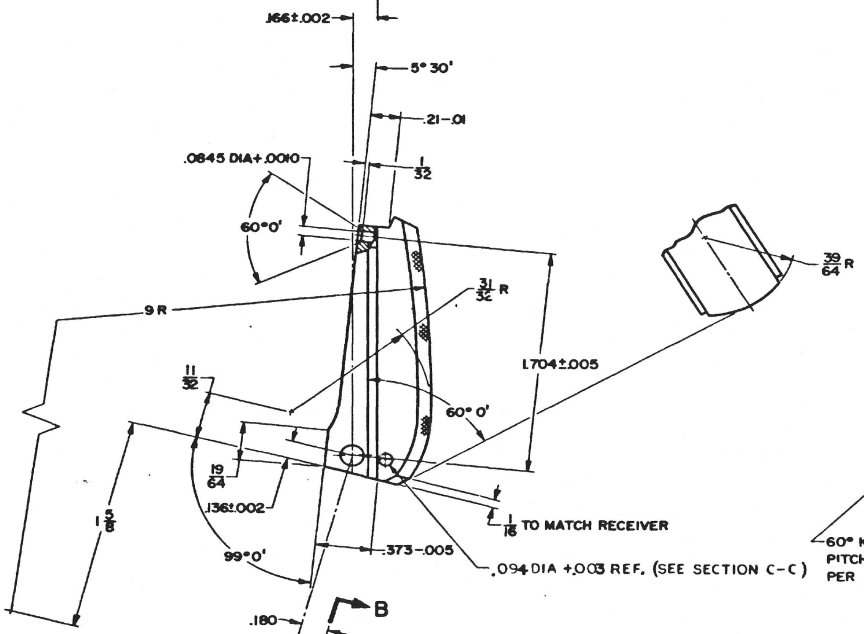

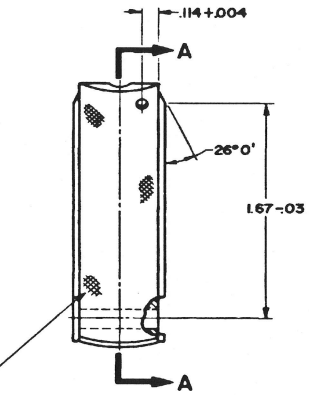

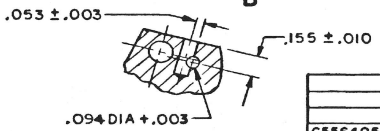

PARTIAL SECTION C-C

		PHYSICAL PROPERTIES
	PISTOL, MISHIAI	YP
	NATL MATCH	TS
C5564058	PISTOL, MISHIAI	EL2
812006348	PISTOL, M15	RA
NEXT ASSY	SHEET 1	BH
APPLICATION		RH
DO NOT SHOW	APPLY PART NO. AS SPECIFIED	

UNLESS OTHERWISE SPECIFIED
DIMENSIONS ARE IN INCHES
TOLERANCES ON
FRACTIONS ±1/64 DECIMALS ±.010 ANGLES ±1°0'
MATERIAL
SEE NOTE 2
HEAT TREATMENT
FINAL PROTECTIVE FINISH

ORIGINAL DATE OF DRAWING 1 MAY 28
DRAFTSMAN E.R.C. CHECKER K.R.M.
TRACER T.A.P. CHECKER E.R.C.
ISSUED ALFS 1-6 DATE 28 MAY 28
SUBMITTED
ORD CORPS
APPROVED BY OFFICER OF THE CHIEF OF ORDNANCE
LT COL ORD CORPS

HOUSING, MAINSPRING

SCALE 2/1 UNIT WT .16 LB

CURRENT DESIGN ACTIVITY CAGE C
U.S. ARMY
ARMAMENT RESEARCH, DEVELOPMENT AND E
PICATINNY ARSENAL, NEW JERSEY

PART NO. 5503841

DEPT
SPRING
SPRING

DWG SIZE D

D5

NOTICE: UNLESS GOVERNMENT DRAWINGS, SPECIFICATIONS OR OTHER DATA ARE USED FOR ANY PURPOSE OTHER THAN IN CONNECTION WITH A DEFINITELY RELATED GOVERNMENT PROCUREMENT OPERATION, THE UNITED STATES GOVERNMENT THEREBY INCURS NO RESPONSIBILITY NOR ANY OBLIGATION WHATSOEVER; AND THE FACT THAT THE GOVERNMENT MAY HAVE FORMULATED, FURNISHED, OR IN ANY WAY SUPPLIED THE SAID DRAWINGS, SPECIFICATIONS OR OTHER DATA IS NOT TO BE REGARDED BY IMPLICATION OR OTHERWISE AS IN ANY MANNER LICENSING THE HOLDER OR ANY OTHER PERSON OR CORPORATION OR CONVEYING ANY RIGHTS OR PERMISSION TO MANUFACTURE, USE OR SELL ANY PATENTED INVENTION THAT MAY IN ANY WAY BE RELATED THERETO.

REVISIONS			
SYM	DESCRIPTION	DATE	APPROVAL
10	← →	21 MAR 52	
A	REDRAWN AND REVISED, SEE EO SA 26316	27 NOV 62	
B	SEE EO. RIA-14141	4-27-67	
C	(2) SEE ERR HQR 50631	5 MAY 75	
D	(1) SEE NOR 76E0044-0000	2 AUG 76	
E	REDRAWN W/CHANGE NOR W4S2049 840719 (ECP W4S2067/841224)	706.21	

NOTES:

1. FOLLOWER, SPRING, AND MAX CARTRIDGE (.4801 DIA-.0001) MUST FUNCTION FREELY WITHIN FINISHED TUBE.
2. MAXIMUM CARTRIDGE .480 MUST RELEASE WITHIN A DISTANCE OF .82 MAX AS MEASURED ALONG THE TOP SURFACE OF THE MAGAZINE TUBE, FROM THE REAR FACE.
3. MIL-W-13855 APPLIES.
4. MAGAZINE ASSEMBLY MUST BE RETAINED IN A MAXIMUM RECEIVER ASSEMBLY AND MUST FIT IN A MINIMUM RECEIVER ASSEMBLY, DROPPING OUT OF ITS OWN WEIGHT WHEN THE MAGAZINE CATCH IS DEPRESSED, ACCORDING TO THE PROVISIONS OF PARAGRAPH 3.3.10 OF FEDERAL SPECIFICATION D-P-355a.
5. MAGAZINES SHALL BE CAPABLE OF PASSING A 500 ROUND FUNCTION FIRING TEST ACCORDING TO THE PROVISIONS OF PARAGRAPH 3.3.27 AND TABLE I OF FEDERAL SPECIFICATION D-P-355a.

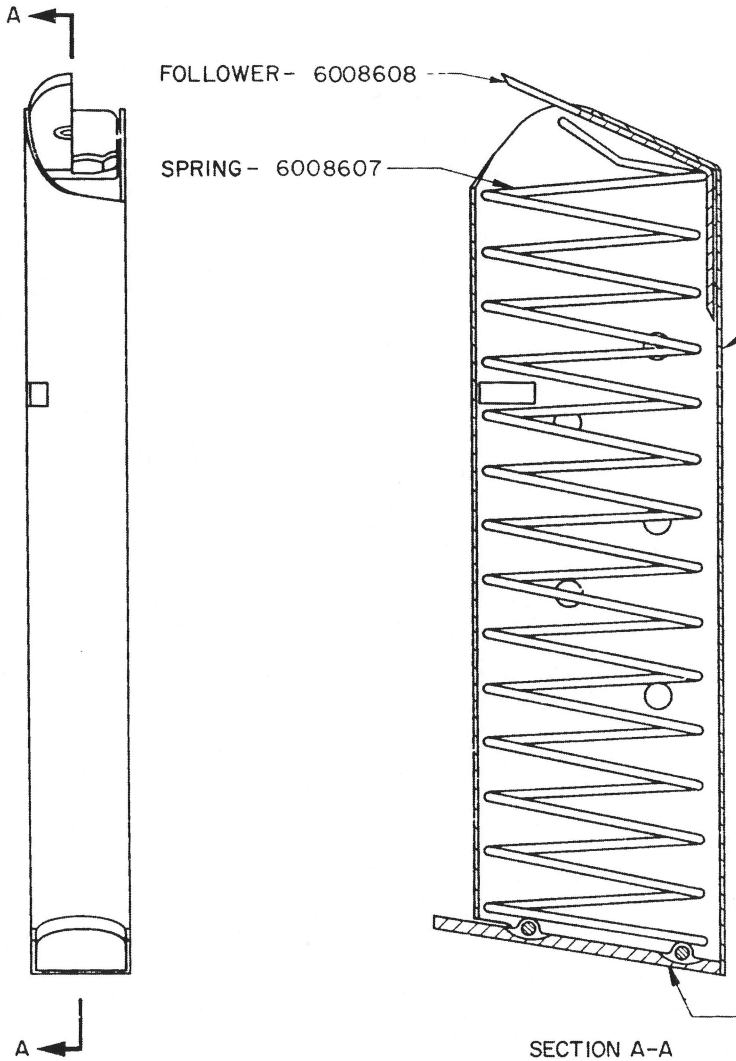

19200 - ASSY 5508694
MFR: CODE IDENT. NO.
(SEE 6147114 OR 7265559 FOR APPLICATION)

C5508694

CURRENT DESIGN ACTIVITY CAGE CODE 19200
U.S. ARMY
ARMAMENT RESEARCH, DEVELOPMENT AND ENGINEERING CENTER
PICATINNY ARSENAL, NEW JERSEY 07806-5000

SEE SEPARATE PARTS LIST 5508694

PART NO. 5508694 | CAGE CODE 19205

PHYSICAL PROPERTIES			
YP		F7791205	PISTOL M1911 A1 NATL MATCH
YB		F7265655	PISTOL M1911 A1
EL 2			
RA			
BH		NEXT ASSY	USED ON
RH		APPLICATION	
		DO NOT	APPLY PART NO

UNLESS OTHERWISE SPECIFIED DIMENSIONS ARE IN INCHES
TOLERANCES ON DECIMALS ANGLES FRACTIONS
MATERIAL
HEAT TREATMENT
FINAL PROTECTIVE FINISH

ORIGINAL DATE OF DRAWING 1 MAY 28
DRAFTSMAN E.R.C. CHECKER K.T.M.
TRACER CHECKER
ENGINEER ENGINEER
SUBMITTED ORD CORPS
APPROVED BY ORDER OF THE CHIEF OF ORDNANCE LT COL ORD CORPS

MAGAZINE ASSEMBLY

SCALE 2/1 UNIT WT .09LB

DEPT OF THE ARMY
SPRINGFIELD ARMORY
SPRINGFIELD, MASS

DWG SIZE C 5508694
SHEET 1 OF 1

RMH

DRAWING SIZE D

REVISIONS				
ZONE	LTR	DESCRIPTION	DATE (YR MO DA)	APPROVED
	N	REDRAWN W/CHANGE NOR W4S2049/840719 (ECP W4S2067/841224)	870621	DM DRFT

NOTES:
1. FINISH 125√ ALL OVER.
2. OMIT PIN HOLES IF USED IN WELDED ASSEMBLY 7265559.
3. TUBE, STEEL, SAE 1045 OR 1050, ASTM A519.
4. MIL-W-13855 APPLIES.

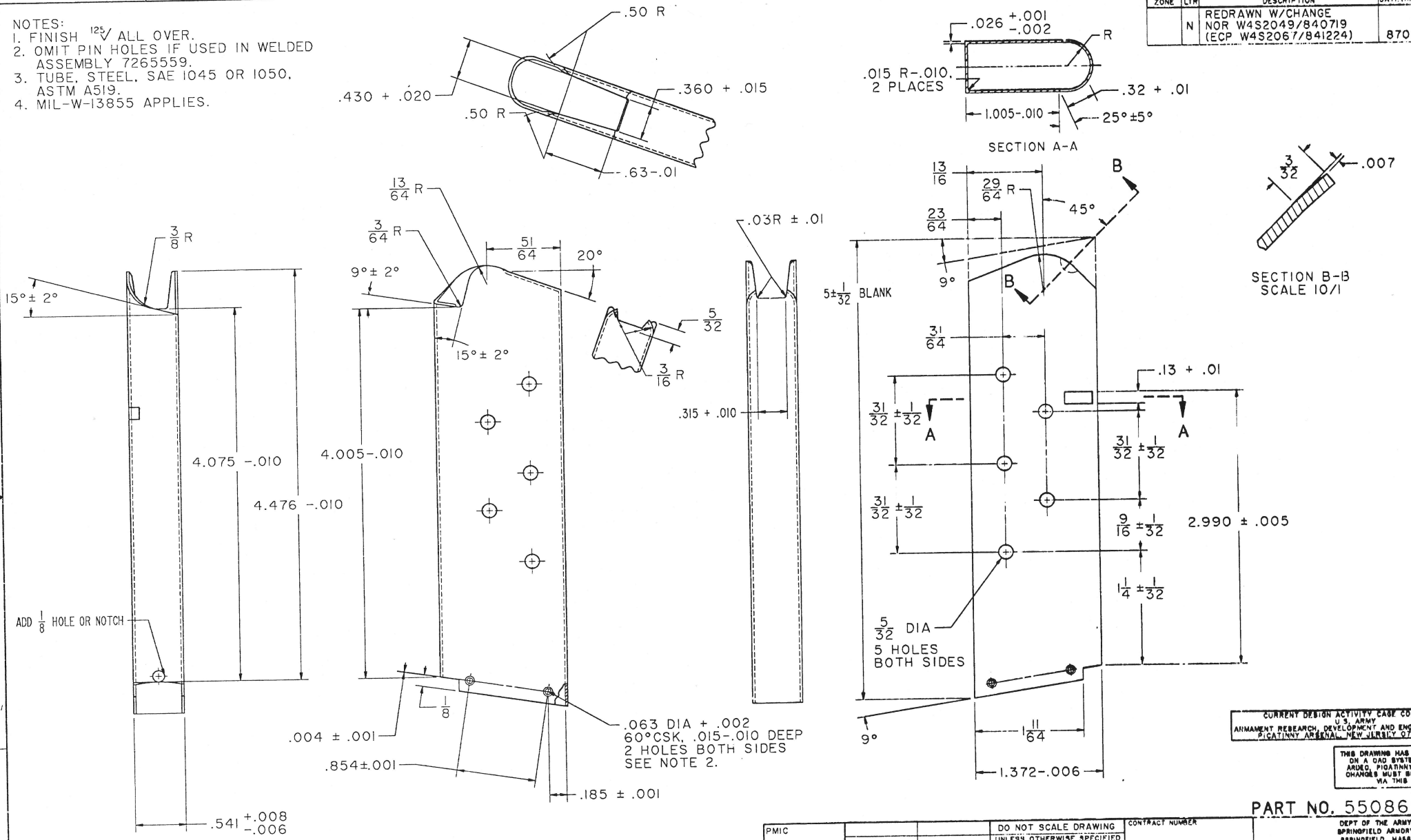

CURRENT DESIGN ACTIVITY CAGE CODE 19205
U.S. ARMY
ARMAMENT RESEARCH, DEVELOPMENT AND ENGINEERING CENTER
PICATINNY ARSENAL, NEW JERSEY 07806-5000

THIS DRAWING HAS BEEN GENERATED ON A CAD SYSTEM LOCATED AT ARDEC, PICATINNY ARSENAL, N.J. CHANGES MUST BE INCORPORATED VIA THIS SYSTEM.

PART NO. 5508695

PMIC		DO NOT SCALE DRAWING	CONTRACT NUMBER
		UNLESS OTHERWISE SPECIFIED DIMENSIONS ARE IN INCHES TOLERANCES ON DECIMAL 2 PL ± .01 3 PL ± FRACTION ±1/64 ANGLES ± 1°	CONTRACTOR
MECHANICAL PROPERTIES		THIRD ANGLE PROJECTION	DRAWN BY W.A.R. DATE (YR-MO-DA) 28-05-01
YP			CHECKER K.T.Y. ENGINEER H.E.S.
TS	B7265559 PISTOL, M911A1		DRAWING APPROVAL V. A LUUKKONEN
EL2	B6147114 PISTOL, M911A1		DESIGN APPROVAL S C HULTZ
RA	NATL MATCH		
BH		MATL ENGR	CADDS REV - 863
RH	NEXT ASSY / USED ON APPLICATION		

DEPT OF THE ARMY
SPRINGFIELD ARMORY
SPRINGFIELD, MASS

TUBE, MAGAZINE

SIZE	CAGE CODE	
D	19205	5508695
SCALE 2/1	UNIT WT .12 LB	SHEET

SMCAR FORM 68, 1 DEC 87(TEMP), REPLACES SMCAR FORM 68, 1 MAR 87(TEMP), WHICH MAY BE USED UNTIL EXHAUSTED

REVISIONS				
ZONE	LTR	DESCRIPTION	DATE (YR MO DA)	APPROVED
	F	REDRAWN W/CHANGE NOR W4S2049/840719 (ECP W4S2067/841224)	870621	ORFI

NOTES:
1. FINISH ALL OVER 125√.
2. STEEL, SAE 1017 THRU 1025, ASTM A576 OR STEEL, SAE 1117 OR 1118, ASTM A108.
3. FINISH 5.3.1.2. OF MIL-STD-171.
4. MIL-W-13855 APPLIES.

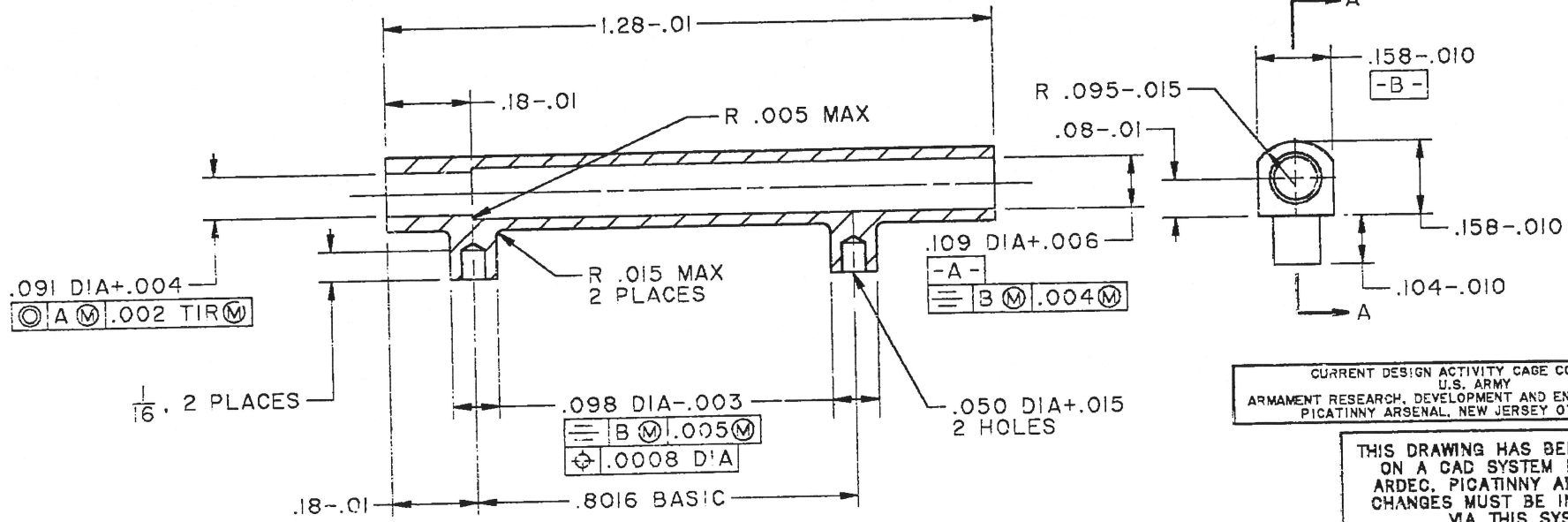

CURRENT DESIGN ACTIVITY CAGE CODE 19200
U.S. ARMY
ARMAMENT RESEARCH, DEVELOPMENT AND ENGINEERING CENTER
PICATINNY ARSENAL, NEW JERSEY 07806-5000

THIS DRAWING HAS BEEN GENERATED ON A CAD SYSTEM LOCATED AT ARDEC, PICATINNY ARSENAL, N.J. CHANGES MUST BE INCORPORATED VIA THIS SYSTEM.

PART NO. 6008594

B12006343	PISTOL, M15	
	PISTOL, M9IIA1	
F7790428	NATL MATCH	
D6508389	PISTOL, M9IIA1	
NEXT ASSY	USED ON	
APPLICATION		

PMIC

MECHANICAL PROPERTIES
YP
TS
EL2
RA
BH
RH

DO NOT SCALE DRAWING

UNLESS OTHERWISE SPECIFIED DIMENSIONS ARE IN INCHES
TOLERANCES ON
DECIMAL: 2 PL ±, 3 PL ±
FRACTION: ±1/64

THIRD ANGLE PROJECTION

MATL ENGR

CADDS REV - 263

CONTRACT NUMBER

CONTRACTOR

DRAWN BY ECP — DATE(YR-MO-DA) 28-05-01
CHECKER A.J.S. — ENGINEER H.E.S.
DRAWING APPROVAL V. A. LUUKKONEN
DESIGN APPROVAL S. C. SHULTZ

DEPT OF THE ARMY
SPRINGFIELD ARMORY
SPRINGFIELD MASS

TUBE, PLUNGER

SIZE B — CAGE CODE 19205 — 6008594
SCALE 4/1 — UNIT WT. .004 LB — SHEET

SMCAR FORM 66, 1 MAR 88(TEMP) REPLACES SMCAR FORM 66, 1 JUL 87(TEMP) WHICH MAY BE USED UNTIL EXHAUSTED

NOTES:-

1. FINISH 125 ALL OVER.
2. ALL EDGES SHALL BE BROKEN .005 + .010 UNLESS OTHERWISE SPECIFIED.
3. MATERIAL:
   A. STEEL, CMPSN 1060 ASTM A576 AUSTENITIC GRAIN SIZE 6 OR FINER.
   B. STEEL, CMPSN 4140 ASTM A322 OR A331. AUSTENITIC GRAIN SIZE 6 OR FINER.
   C. INVESTMENT CASTING 1C4140 OR 1C6150 SPEC MIL-S-22141.
4. INSPECT CASTINGS PER MIL-STD-2175, CLASS 2, GRADE A AND C.
5. FINISH 5.3.1.2 OF MIL-STD-171.
6. MIL-W-13855 APPLIES.

REVISIONS

SYM	DESCRIPTION	DATE	
12		20MAY79	
A	REDRAWN AND REVISED WAS "B" SIZE, SEE EO SA 26316	27NOV62	
B	(1-6) SEE EO RIA-14058	3-21-67	
C	(5) SEE ERR HQR 30687-2	19JUN73	
D	SEE ERR HQR 50605	10FEB 75	
E	(1) SEE NOR 76E0062-0002	7 OCT 76	
F	NOR W8S8002 79-02-07	79-05-01	
G	NOR W3S2037 83-09-13	83-10-21	
H	NOR W3S2042 83-09-21	84-07-18	
J	NOR W3S2030 83 08 08 ECP W4S2037 84 08 24	850821	
K	NOR G9S2112 900123	900419	

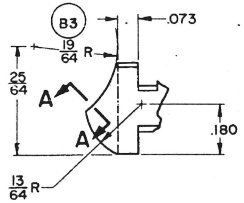

DETAIL B
SCALE 4/1

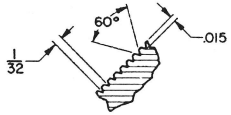

PARTIAL SECTION A-A
SECTION APPLIES TO SERRATIONS IN BOTH DIRECTIONS (90° APART). B5
SCALE 4/1

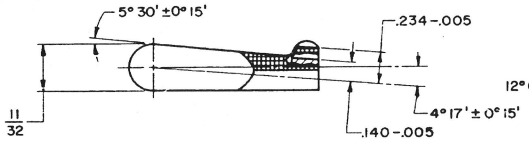

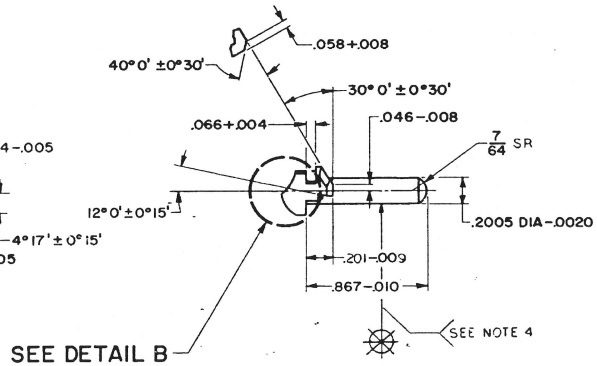

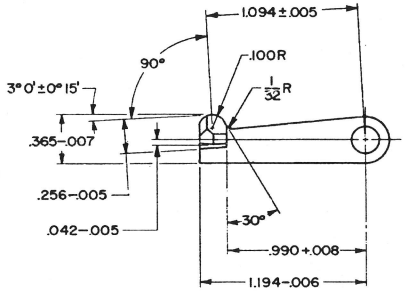

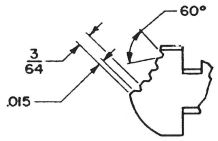

ALTERNATIVE METHOD
B4 SERRATIONS APPLY IN ONE DIRECTION ONLY.
SCALE 4/1

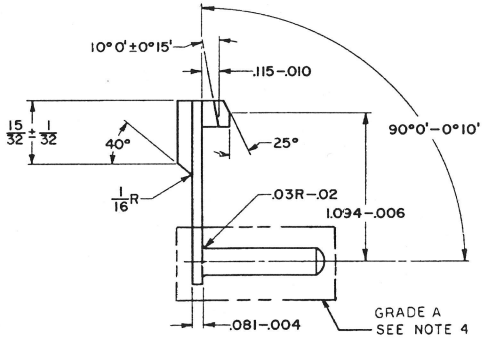

D 6008

CURRENT DESIGN ACTIVITY CAGE CODE 19200
U.S. ARMY
ARMAMENT RESEARCH, DEVELOPMENT AND ENGINEERING
PICATINNY ARSENAL, NEW JERSEY 07806-500

PART NO. 6008595

B12006321	PISTOL, M15	PHYSICAL PROPERTIES	
F7268381		YP	
F7265655	PISTOL, M9A1	TS	
		ELZ	
		RA	
		BH	
APPLICATION		RH	C43.5 TO 50
DO NOT APPLY PART NO.			

UNLESS OTHERWISE SPECIFIED
DIMENSIONS ARE IN INCHES
TOLERANCES ON FRACTIONS ±1/64 DECIMALS ±.010 ANGLES ±1°
MATERIAL: SEE NOTE 3
HEAT TREATMENT: AUSTEMPER
FINAL PROTECTIVE FINISH: SEE NOTE 5

ORIGINAL DATE OF DRAWING 1 MAY 28
DRAFTSMAN L.B. CHECKER S.C.
TRACER R.A.A. CHECKER R.J.
CHIEF R.E. Silva
SUBMITTED
APPROVED R.S. Shelin

STOP, SLIDE

SCALE 2/1 UNIT WT. .02LB

SPRINGFIELD AR
SPRINGFIELD, M
FSCM NO.
DWG SIZE D 6008
SHEET 1

RMH

REVISIONS			
SYM	DESCRIPTION	DATE	APPROVAL
A	← →	13 FEB 56	
B	REDRAWN AND REVISED WAS "B" SIZE, SEE EO SA 26316	27 NOV 62	
C	SEE ERR HQR 20721	26 JUL 72	
D	SEE ERR HQR 20783	13 OCT 72	
E	(3) SEE ERR HQR 30687-2	19 JUN 73	
F	NORWOS2002 81-02-26	82-01-15	
G	ERR Z9Z1271AB (ECP W3S0008/830318)	900717	
H	NOR GOS2022/900522	901019	

C6008596

NOTES:

1. FINISH 125 EXCEPT AS NOTED.
2. ALL EDGES SHALL BE BROKEN .005+.010 UNLESS OTHERWISE SPECIFIED.
3.
4. MATERIAL:
   INVESTMENT CASTING, COMP IC 4140, MIL-S-22141.
   OR
   STEEL, COMP 1060 THRU 1070, SPEC ASTM A576 OR COMP 4140, SPEC ASTM A322, A331. AUSTENITIC GRAIN SIZE 6 OR FINER.
5. FINAL HEAT TREATMENT: HEAT TREAT AND TEMPER TO HARDNESS SPECIFIED.
6.
7. RAIDOGRAPHIC INSPECTION PER MIL-STD-2175, CLASS 2, GRADE B.
8. FINAL PROTECTIVE FINISH: FINISH 5.3.1.2 OF MIL-STD-171.

10. MIL-W-13855 APPLIES

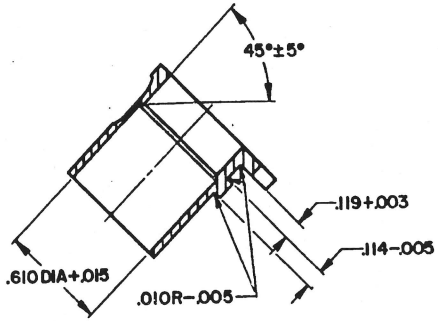

SECTION A-A

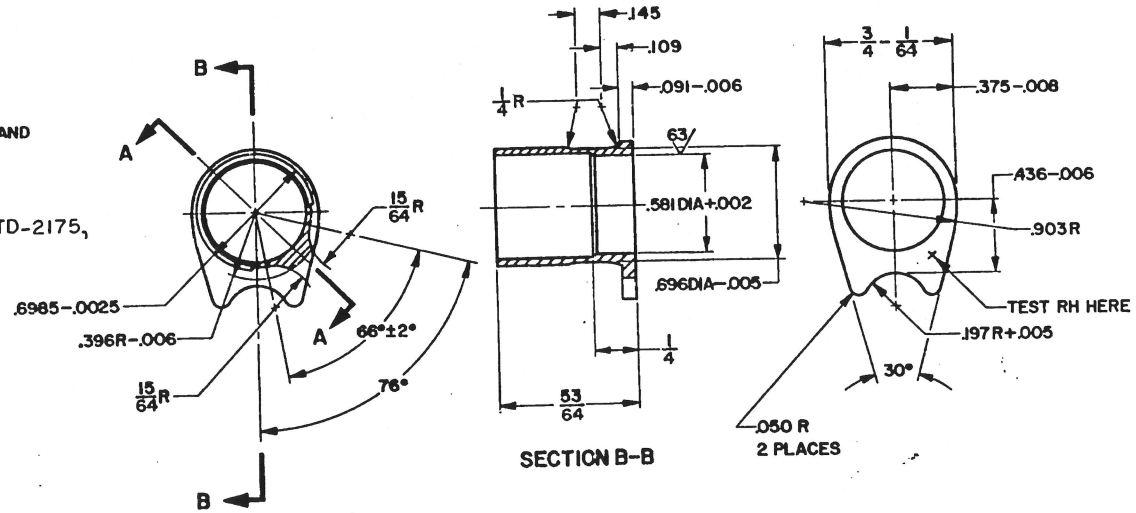

SECTION B-B

C6008596

CURRENT DESIGN ACTIVITY CAGE CODE 19200
U.S. ARMY
ARMAMENT RESEARCH, DEVELOPMENT AND ENGINEERING CENTER
PICATINNY ARSENAL, NEW JERSEY 07806-5000

PART NO. 6008596

PHYSICAL PROPERTIES			
TP			
TS			
EL %			
RA			
BH			
RH	C39.5 TO 46		

B2006318	PISTOL M15
F7265635	PISTOL M15A1
NEXT ASSY	USED ON
APPLICATION	
DO NOT	APPLY PART NO.

UNLESS OTHERWISE SPECIFIED DIMENSIONS ARE IN INCHES
TOLERANCES ON DECIMALS ±.010
ANGLES ±1° FRACTIONS ±1/64
MATERIAL: SEE NOTE 4
HEAT TREATMENT: SEE NOTE 5
FINAL PROTECTIVE FINISH: SEE NOTE 8

ORIGINAL DATE OF DRAWING 1 MAY 28
DRAFTSMAN RMM
TRACER
SPEC.
CHECKED JTS
SYSTEMS ANS
CHIEF DRAFTSMAN WG
SUBMITTED V.A. LUUKKONEN
APPROVED BY ORDER OF THE CHIEF OF ORDNANCE S.C. MEOLA

BUSHING, BARREL

SPRINGFIELD ARMORY, SPRINGFIELD, MA

CODE IDENT NO. 19205
SCALE 2/1 UNIT WT 02 LB

SIZE C 6008596
SHEET OF

SCANNED DUPLICATE ORIGINAL

REVISIONS				
ZONE	LTR	DESCRIPTION	DATE (YR MO DA)	APPROVED
	E	REDRAWN W/CHANGE NOR W4S2049/840719 (ECP W4S2067/841224)	870521	ORFI

NOTES:
1. FINISH 125√ ALL OVER.
2. HEAT TREATMENT: HEAT AT 1500° TO 1550°F: OIL QUENCH. TEMPER 30 MINUTES AT HEAT TO HARDNESS SPECIFIED. HEAT TREATMENT METHOD IS FOR GUIDANCE, EXCEPT THAT TEMPERING TIME SHALL NOT BE REDUCED BELOW THAT SPECIFIED.
3. MATERIAL: STEEL, CARBON: SAE 1045, 1050, 1137: ASTM A108.
4. FINISH 5.3.1.2 OF MIL-STD-171.
5. MIL-W-13855 APPLIES.

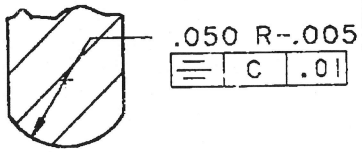

DETAIL B
SCALE 10/1

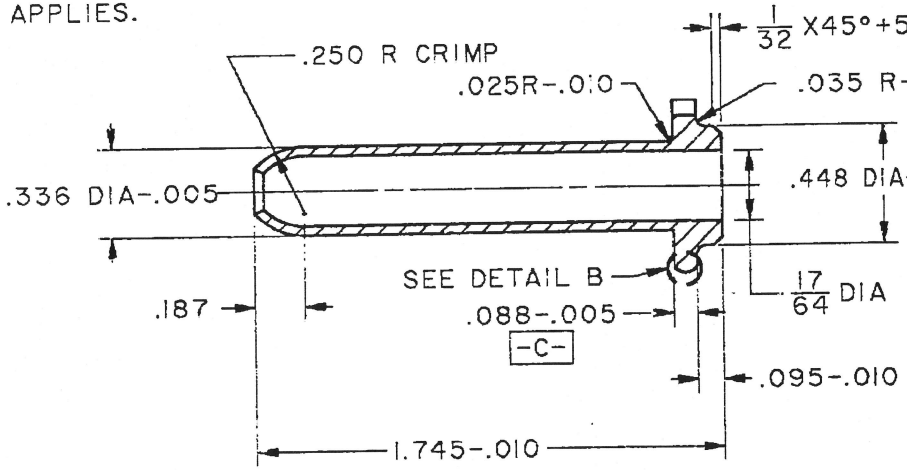

SECTION A-A

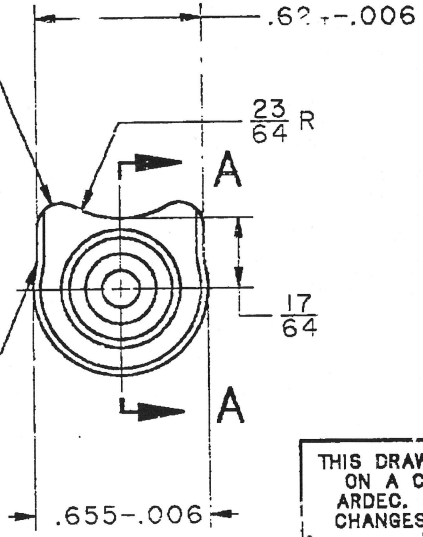

THIS DRAWING HAS BEEN GENERATED ON A CAD SYSTEM LOCATED AT ARDEC, PICATINNY ARSENAL, N.J. CHANGES MUST BE INCORPORATED VIA THIS SYSTEM.

CURRENT DESIGN ACTIVITY CAGE CODE 19205
U.S. ARMY
ARMAMENT RESEARCH, DEVELOPMENT AND ENGINEERING CENTER
PICATINNY ARSENAL, NEW JERSEY 07806-5000

PART NO. 6008597

PMIC			
MECHANICAL PROPERTIES			
YP			
TS			
EL2			
RA			
BH			
RH	C35 TO 40		
	F7791205	PISTOL,M9IIA1	
		NATL MATCH	
	F7265655	PISTOL,M9IIA1	
	B12006336	PISTOL,M15	
	NEXT ASSY	USED ON	
	APPLICATION		

DO NOT SCALE DRAWING
UNLESS OTHERWISE SPECIFIED DIMENSIONS ARE IN INCHES
TOLERANCES ON

DECIMAL	FRACTION
2 PL ±	±1/64
3 PL ±.010	

THIRD ANGLE PROJECTION

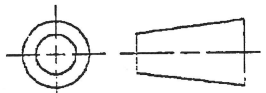

MATL ENGR
CADDS REV - 263

CONTRACT NUMBER
CONTRACTOR

DRAWN BY E.R.C.	DATE(YR-MO-DA) 28-05-01
CHECKER A.J.S.	ENGINEER H.E.S.
DRAWING APPROVAL V. A. LUUKKONEN	
DESIGN APPROVAL S. C. SHULTZ	

DEPT OF THE ARMY
SPRINGFIELD ARMORY
SPRINGFIELD MASS

GUIDE, RECOIL SPRING

SIZE	CAGE CODE	
B	19205	6008597
SCALE 2/1	UNIT WT.	SHEET

ORFI

SMCAP FORM 66, 1 MAR 88(TEMP) REPLACES SMCAR FORM 66, 1 JUL 87(TEMP) WHICH MAY BE USED UNTIL EXHAUSTED

AWING SIZE D
RADCOMR 70-12)

NOTES:
1-FINISH 125√

2-MATERIAL:-STEEL, SAE 1060 THRU 1095; ASTM A576 OR ASTM A108. AUSTENITIC GRAIN SIZE 7 OR FINER.
3-HEAT TREATMENT:- AUSTENITIZE AT 1525° TO 1550°F. AUSTEMPER AT 700°F. TEMPER IF NECESSARY TO HARDNESS SPECIFIED.
4-UNLESS OTHERWISE SPECIFIED, SURFACES REQUIRING 32√ AND FINER ROUGHNESS HEIGHT RATING MAY BE PROCESSED AFTER APPLICATION OF FINAL PROTECTIVE FINISH. BRIGHT AREAS RESULTING FROM SUCH PROCESSING ARE PERMISSIBLE.
5-MIL-W-13855 APPLIES.
6-FINAL PROTECTIVE FINISH:- FINISH 5.3.1.2 OF MIL-STD-171.
7-DIMENSIONS APPLY AS MACHINED BEFORE BENDING UNLESS OTHERWISE NOTED.
8-PART BENT TO THIS FINAL DIMENSION.

REVISIONS			
SYM	DESCRIPTION	DATE	
G	REPLACES REV F W/ CHANGE NOR W4S0004/84-08-24	841210	
H	NOR W4S2049/84 0719 (ECP W4S2067/84 12 24)	870621	
J	NOR G3S3089 930902	931021	

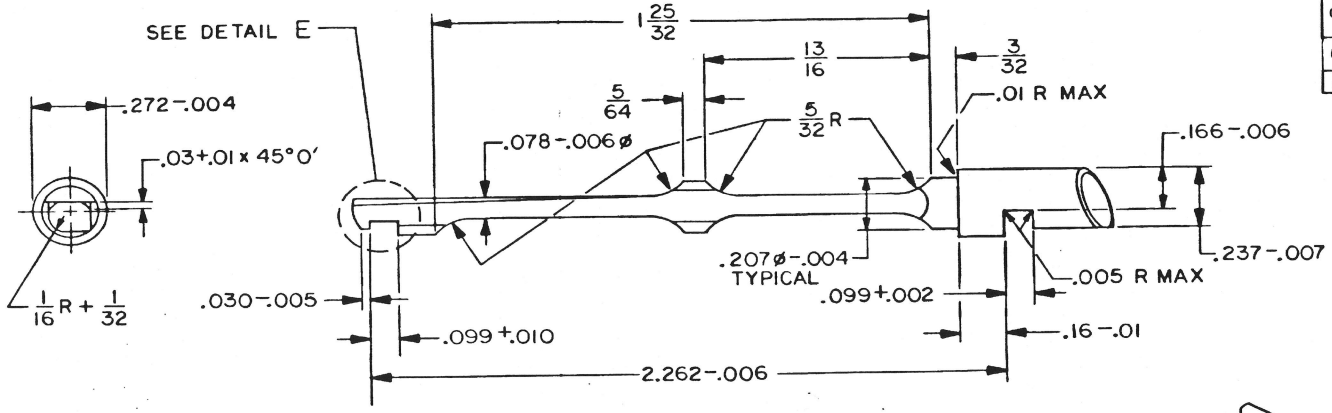

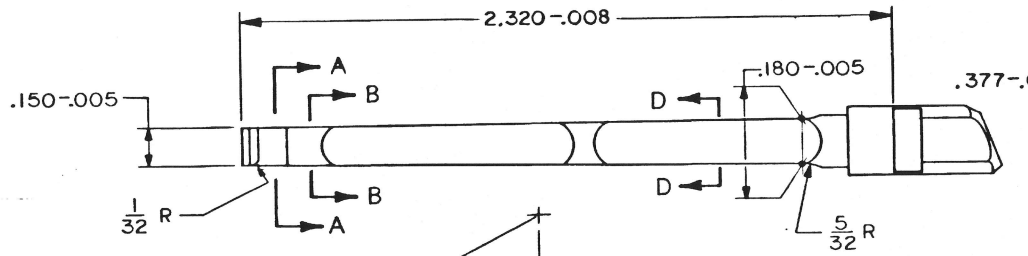

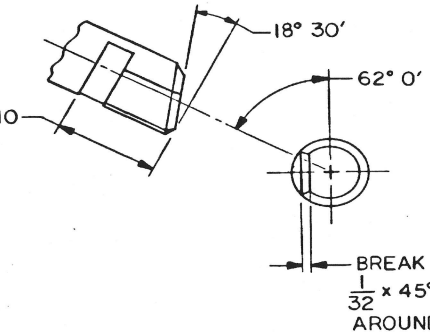

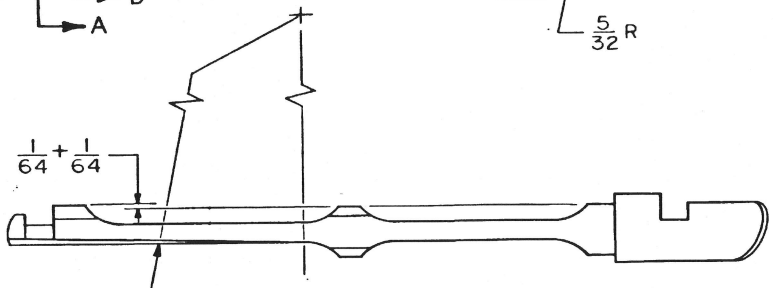

BEND
SEE NOTE 8

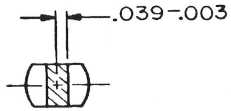

SECTION D D

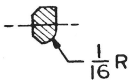

SECTION A-A

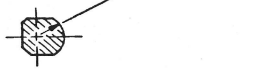

SECTION B-B

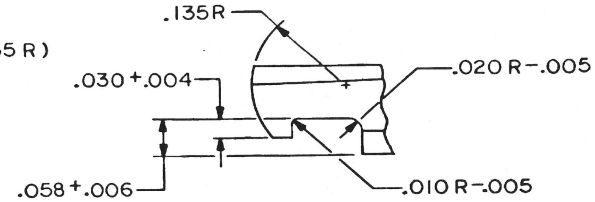

DETAIL E
SCALE 10/1

		MECHANICAL PROPERTIES	
		YP	
		TS	
B12006318	PISTOL M15	EL2	
F7791205	PISTOL M1911A1	RA	
	NAT'L MATCH	BH	
F7265655	PISTOL M1911A1	RH	C48 TO 52
NEXT ASSY	USED ON		
APPLICATION			

DO NOT SCALE DRAWING
UNLESS OTHERWISE SPECIFIED DIMENSIONS ARE IN INCHES
TOLERANCES ON DECIMALS ± .010
FRACTIONS ± 1/64 ANGLES ± 1° 0'

ORIGINAL DATE OF DRAWING 1 MAY 28
DRAFTSMAN H.E.S. CHECKER M.F.
ENGR ENGR
ENGR ENGR

CURRENT DESIGN ACTIVITY CAGE CODE
U.S. ARMY
ARMAMENT RESEARCH, DEVELOPMENT AND ENGINE
PICATINNY ARSENAL, NEW JERSEY 07806

PART NO. 6008598

SPRINGFIELD ARMORY
SPRINGFIELD, MA

EXTRACTOR

SIZE	CAGE CODE	
D	19205	600859
SCALE 4/1	UNIT WT. .01 LB	SHEET

ARRADCOM FORM 68 AUG 77 REPLACES SARPA FORM 1041 NOV 72 WHICH MAY BE USED UNTIL EXHAUSTED

DRAWING SIZE C

REVISIONS				
ZONE	LTR	DESCRIPTION	DATE (YR MO DA)	APPROVED
	F	REDRAWN W/CHANGE NOR W4S2049/840719 (ECP W4S2067/841224)	870621	ORFI

NOTES:

1. FINISH 125√ EXEPT AS NOTED.
2. MATERIAL: STEEL, SAE 1060, 1070, 1095 ASTM A108 OR ASTM A576. AUSTENITIC GRAIN SIZE 7 OR FINER.
3. HEAT TREATMENT: HEAT AT 1450° TO 1500°F. OIL QUENCH. TEMPER 30 MINUTES AT HEAT TO HARDNESS SPECIFIED. HEAT TREATMENT METHOD IS FOR GUIDANCE EXCEPT THAT TEMPERING TIME SHALL NOT BE REDUCED BELOW THAT SPECIFIED.
4. TAKE HARDNESS READING ON .20 DIA-.01.
5. MIL-W-13855 APPLIES.
6. FINISH 5.3.1.2 OR 5.3.2.2 OF MIL-STD-171.

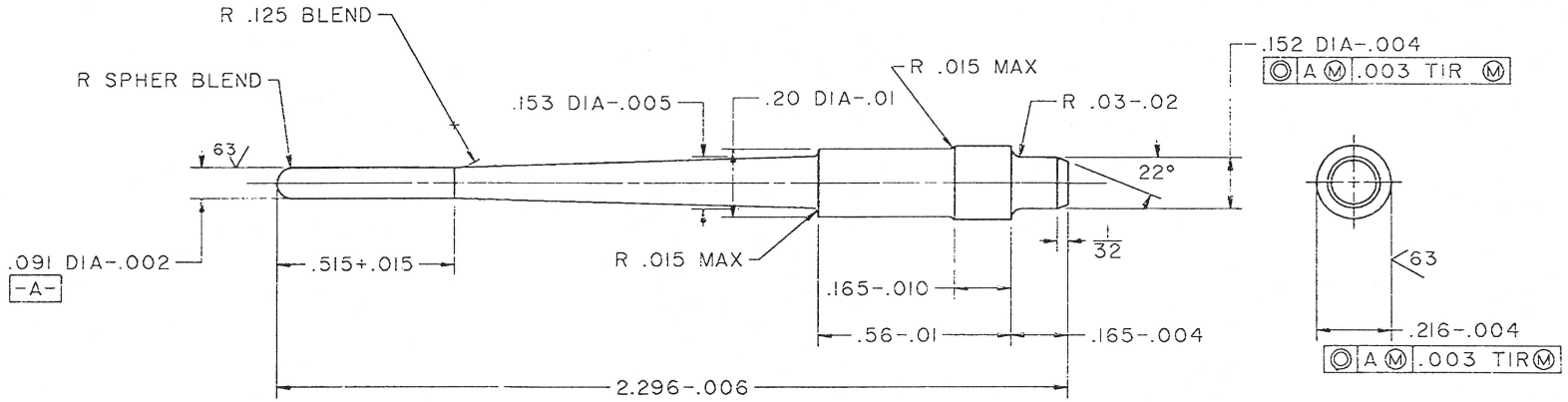

CURRENT DESIGN ACTIVITY CAGE CODE 19200
U.S. ARMY
ARMAMENT RESEARCH, DEVELOPMENT AND ENGINEERING CENTER
PICATINNY ARSENAL, NEW JERSEY 07806-5000

THIS DRAWING HAS BEEN GENERATED ON A CAD SYSTEM LOCATED AT ARDEC, PICATINNY ARSENAL, N.J. CHANGES MUST BE INCORPORATED VIA THIS SYSTEM.

PART NO. 6008599

PMIC			
MECHANICAL PROPERTIES			
YP			
TS			
EL2			
RA			
BH			
RH	A 70.5 TO 73.5		
		F7791205	PISTOL,M911A1
			NATL MATCH
		F7265655	PISTOL,M911A1
		F12006306	PISTOL, M15
		NEXT ASSY	USED ON
		APPLICATION	

DO NOT SCALE DRAWING

UNLESS OTHERWISE SPECIFIED DIMENSIONS ARE IN INCHES
TOLERANCES ON
DECIMAL: 2 PL ± ; 3 PL ± .010
FRACTION: ± 1/64
ANGLES ± 2°

THIRD ANGLE PROJECTION

MATL ENGR

CADDS REV - 263

CONTRACT NUMBER

CONTRACTOR

DRAWN BY G.S.S.	DATE(YR-MO-DA) 280501
CHECKER L.S.C.	ENGINEER H.E.S.
DRAWING APPROVAL V. A. LUUKKONEN	
DESIGN APPROVAL S. C. SHULTZ	

DEPT OF THE ARMY
SPRINGFIELD ARMORY
SPRINGFIELD MASS

PIN, FIRING

SIZE	CAGE CODE	
C	19205	6008599
SCALE 4/1	UNIT WT. .01 LB	SHEET

SMCAR FORM 67, 1 DEC 87(TEMP), REPLACES SMCAR FORM 67, 1 MAR 87(TEMP), WHICH MAY BE USED UNTIL EXHAUSTED

DRAWING SIZE C

ZONE	LTR	DESCRIPTION	DATE (YR MO DA)	APPROVED
	F	REDRAWN W/CHANGE NOR W4S2049/840719 (ECP W4S2067/841224)	870621	ORFI

NOTES: -

1. FINISH 125 EXCEPT AS NOTED.
2. MATER AL: STEEL, SAE 1065, 1095: ASTM A684 AUSTENITIC GRAIN SIZE 7 OR FINER.
3. HEAT TREATMENT: HEAT AT 1450° TO 1500°F: OIL QUENCH. TEMPER 20 MINUTES AT HEAT TO HARDNESS SPECIFIED. HEAT TREATMENT METHOD IS FOR GUIDANCE EXCEPT THAT TEMPERING TIME SHALL NOT BE REDUCED BELOW THAT SPECIFED.
4. MIL-W-13855 APPLIES.
5. FINISH 5.3.1.2 OF MIL-STD-171.

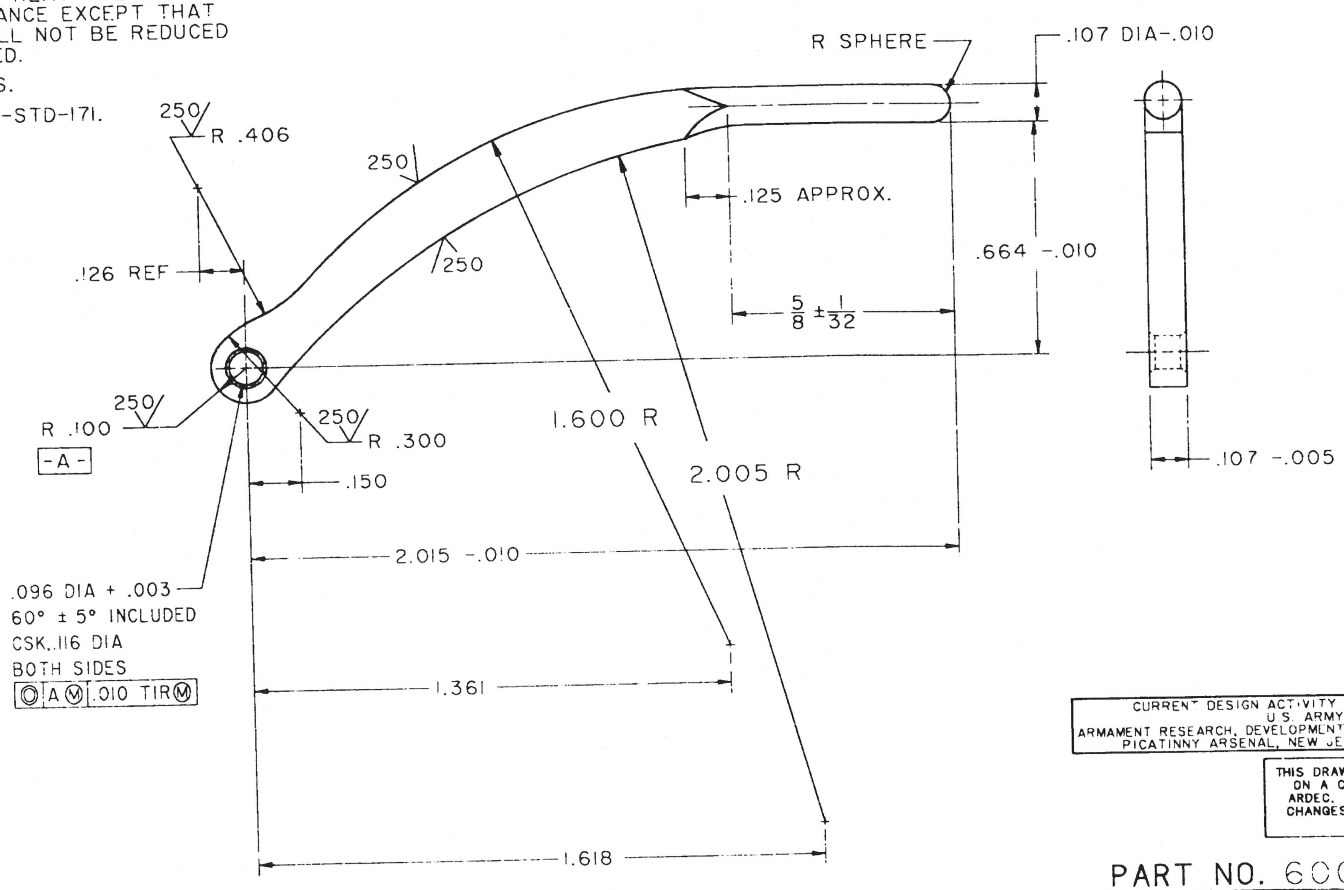

CURRENT DESIGN ACTIVITY CAGE CODE 19200
U.S. ARMY
ARMAMENT RESEARCH, DEVELOPMENT AND ENGINEERING CENTER
PICATINNY ARSENAL, NEW JERSEY 07806-5000

THIS DRAWING HAS BEEN GENERATED ON A CAD SYSTEM LOCATED AT ARDEC, PICATINNY ARSENAL, N.J. CHANGES MUST BE INCORPORATED VIA THIS SYSTEM.

PART NO. 6008600

PMIC		
MECHANICAL PROPERTIES		
YP		
TS		
EL2		
RA		
BH		
RH		

F7791205	PISTOL, M911A1
	NATL MATCH
F7265655	PISTOL, M911A1
F12006306	PISTOL, M15
NEXT ASSY	USED ON
APPLICATION	

DO NOT SCALE DRAWING
UNLESS OTHERWISE SPECIFIED DIMENSIONS ARE IN INCHES
TOLERANCES ON
DECIMAL FRACTION
2 PL ± ±
3 PL ±.010

THIRD ANGLE PROJECTION

MATL ENGR | CADDS REV - 263

CONTRACT NUMBER
CONTRACTOR
DRAWN BY H.E.S | DATE(YR-MO-DA) 28-05-01
CHECKER R.B.D. | ENGINEER W GRANT
DRAWING APPROVAL V. A. LUUKKONEN
DESIGN APPROVAL S. C. SHULTZ

DEPT OF THE ARMY
SPRINGFIELD ARMORY
SPRINGFIELD, MASS.

STRUT, HAMMER

SIZE	CAGE CODE	
C	19205	6008600
SCALE 4/1	UNIT WT .0082LB	SHEET

SMCAR FORM 67, 1 DEC 87(TEMP), REPLACES SMCAR FORM 67, 1 MAR 87(TEMP), WHICH MAY BE USED UNTIL EXHAUSTED

DRAWING SIZE C

REVISIONS				
ZONE	LTR	DESCRIPTION	DATE (YR MO DA)	APPROVED
	G	REDRAWN W/CHANGE NOR W4S2049/840719 (ECP W4S2067/841224)	870621	ORFI

NOTES:
1. HEAT TREATMENT: OIL QUENCH AT 1450° TO 1500°F TEMPER 20 MINUTES AT HEAT TO HARDNESS SPECIFIED. HEAT TREATMENT METHOD IS FOR GUIDANCE, EXCEPT THAT TIME AT TEMPERATURE SHALL NOT BE REDUCED BELOW THAT SPECIFIED.
2. FINISH 125√ EXCEPT AS NOTED.
3. FINISH 3.3.1.1 OF MIL-STD-171.
   ALTERNATIVE:
   FINISH 5.3.1.2 OF MIL-STD-171. STRESS RELIEVE (PRIOR TO APPLICATION OF FINISH).
4. MIL-W-13855 APPLIES.
5. UNLESS OTHERWISE SPECIFIED, SURFACES REQUIRING 32√ AND FINER ROUGHNESS HEIGHT RATING MAY BE PROCESSED AFTER APPLICATION OF FINAL PROTECTIVE FINISH. BRIGHT AREAS ON THOSE SURFACES RESULTING FROM SUCH PROCESSING ARE PERMISSABLE.
6. MATERIAL: STEEL: SAE 1055 THRU 1075: ASTM A684.

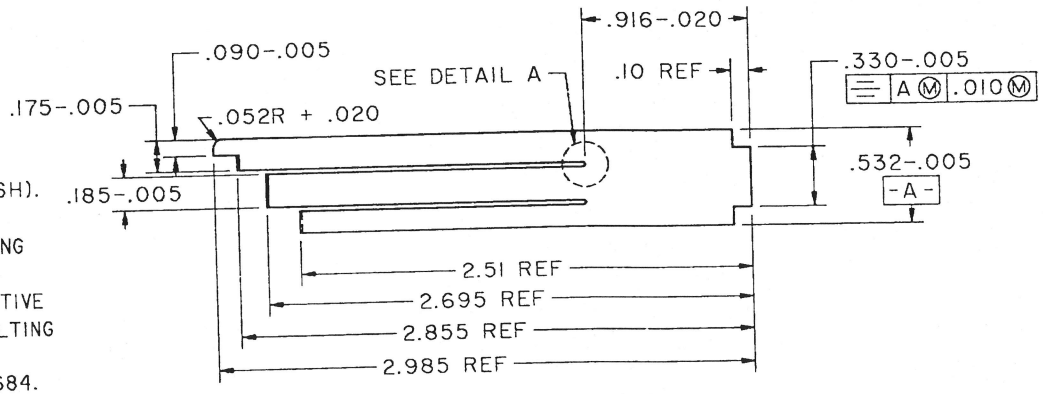

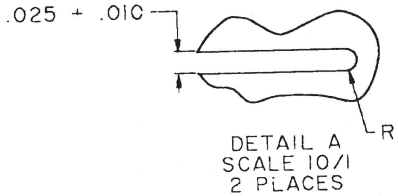

DETAIL A
SCALE 10/1
2 PLACES

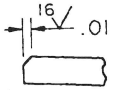

DETAIL B
SCALE 10/1

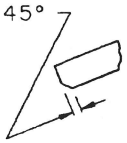

DETAIL C
SCALE 10/1

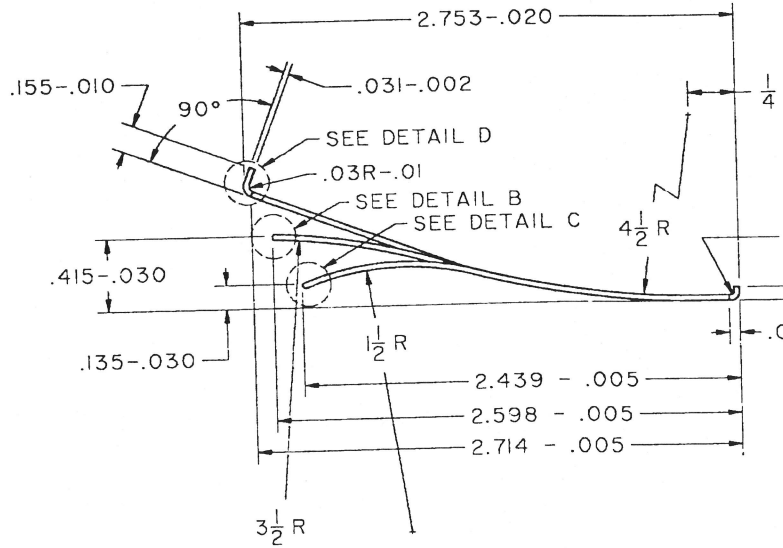

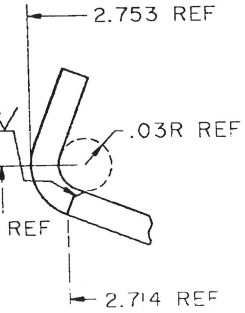

DETAIL D
SCALE 10/1

CURRENT DESIGN ACTIVITY CAGE CODE 19200
U.S. ARMY
ARMAMENT RESEARCH, DEVELOPMENT AND ENGINEERING CENTER
PICATINNY ARSENAL, NEW JERSEY 07806-5000

THIS DRAWING HAS BEEN GENERATED ON A CAD SYSTEM LOCATED AT ARDEC, PICATINNY ARSENAL, N.J. CHANGES MUST BE INCORPORATED VIA THIS SYSTEM.

PART NO. 6008602

PMIC				
MECHANICAL PROPERTIES				
YP				
TS				
EL2				
RA				
BH				
RH	A72 TO 75			

F7791205	PISTOL, M911A1
	PISTOL, M911A1
F7265655	NATL MATCH
F12006306	PISTOL, M15
NEXT ASSY	USED ON
APPLICATION	

DO NOT SCALE DRAWING
UNLESS OTHERWISE SPECIFIED DIMENSIONS ARE IN INCHES
TOLERANCES ON
DECIMAL: 2 PL ± .01, 3 PL ±
FRACTION: ±1/64, ANG ±2°

THIRD ANGLE PROJECTION

MATL ENGR | CADDS REV - 263

CONTRACT NUMBER
CONTRACTOR

DRAWN BY M.E.M.	DATE(YR-MO-DA) 28-05-01
CHECKER S.O.	ENGINEER H.E.S.
DRAWING APPROVAL V. A. LUUKKONEN	
DESIGN APPROVAL S. C. SHULTZ	

DEPT OF THE ARMY
SPRINGFIELD ARMORY
SPRINGFIELD, MASS

SPRING, SEAR

SIZE	CAGE CODE	
C	19205	6008602
SCALE 2/1	UNIT WT. .01 LB	SHEET 1 OF 1

SMCAR FORM 67, 1 DEC 87(TEMP), REPLACES SMCAR FORM 67, 1 MAR 87(TEMP), WHICH MAY BE USED UNTIL EXHAUSTED

D6008603

13			
A	REDRAWN AND REVISED. WAS "B" SIZE. SEE EC PA 80116		
B	(3) SEE ERR HOR 30687-2		
C	(2) SEE ERR HOR 50605		
D	NOR W858003 78-12-19	790517	
E	NORW4S2020/84-05-31	841102	
F	NORW4S2049 / 84 07 11 (ECP W4S2087 / 84 12 21) (ECP W4S2100 / 85 02 13)		
G	ERR Z9Z1288AE (ECP G7S2081 / 88 01 26)	900116	

NOTES:

1. FINISH 125 EXCEPT AS NOTED.
2. MATERIAL:
   A. STEEL CMPSN 1060 THRU 1074 ASTM A576 OR ASTM A108. AUSTENIC GRAIN SIZE 5 OR FINER.
   B. INVESTMENT CASTING 1C4140 OR 1C6150, SPEC MIL-S-22141.
3. UNLESS OTHERWISE SPECIFIED, SURFACES REQUIRING 32 ROUGHNESS HEIGHT RATING MAY BE PROCESSED AFTER APPLICATION OF FINAL PROTECTIVE FINISH. BRIGHT AREAS RESULTING FROM SUCH PROCESSING ARE PERMISSIBLE.
4. NO TRANSVERSE TOOL MARKS PERMITTED ON SURFACES MARKED "32".
5. UNLESS OTHERWISE SPECIFIED ALL INTERIOR CORNERS SHALL BE ROUNDED WITH FILLET RADII OF FROM .005 TO .015 INCH. (B)
6. MIL-W-13855 APPLIES.
7. FINISH 5.3.1.2 OF MIL-STD-171.
8. INSPECT CASTING PER MIL-STD-2175, (C) CLASS 2, GRADE A.
9. ALTERNATIVE MATERIAL: STEEL SAE 4140, 4150 OR 5140, ASTM A322 OR A331, AUSTENITIC GRAIN SIZE 5 OR FINER.

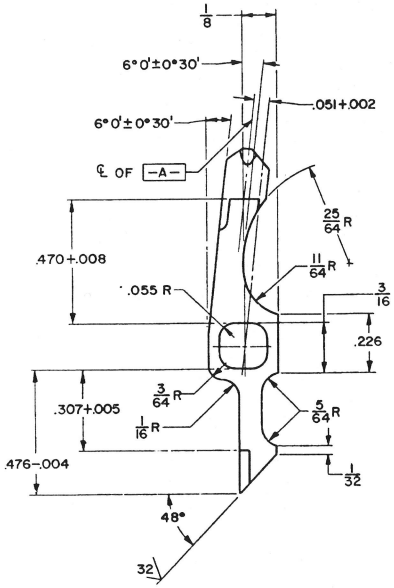

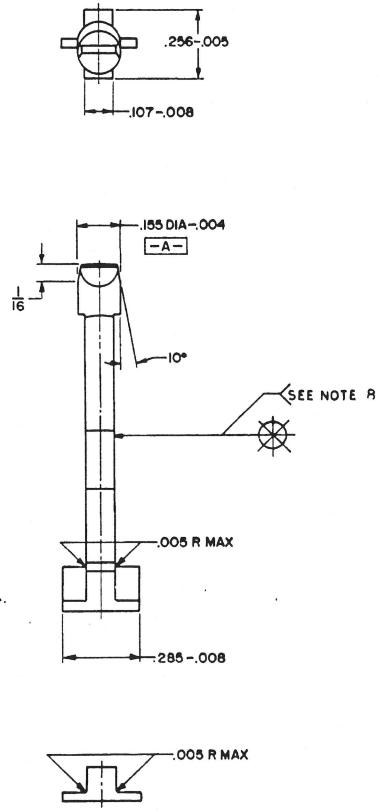

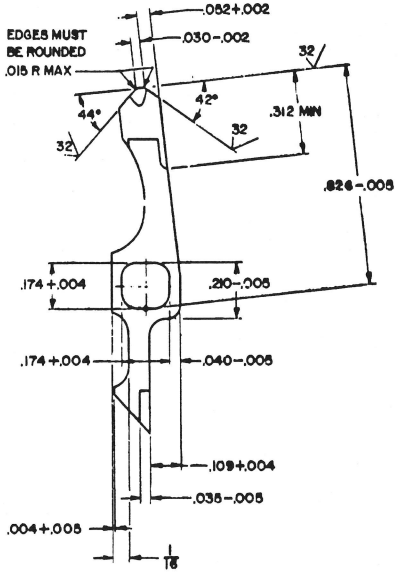

D6008603

F7791205	PISTOL M9A1	YP	
	NATL MATCH	TS	
F7265655	PISTOL M9A1	EL 2	
F12006306	PISTOL M15	RA	
NEXT ASSY	USED ON	BH	
		RH	C43.5 10.50

(B)

UNLESS OTHERWISE SPECIFIED DIMENSIONS ARE IN INCHES TOLERANCES: FRACTIONS ±1/64 DECIMALS ±.010 ANGLES ±1°

MATERIAL: SEE NOTE 2 & 9

HEAT TREATMENT: AUSTEMPER

FINAL PROTECTIVE FINISH: SEE NOTE 8

ORIGINAL DATE OF DRAWING 1 MAY 28

DRAWN EC CHECKED J.F.O.B.

APPROVED

SCALE 4/1 WEIGHT .0043 LB

PART NO. 6008603

CAGE CODE 19205

DISCONNECTOR

DEPT OF THE ARMY SPRINGFIELD ARMORY SPRINGFIELD MASS

D 6008603

SHEET 1 OF 1

RMH

DRAWING SIZE C

REVISIONS				
ZONE	LTR	DESCRIPTION	DATE (YR MO DA)	APPROVED
	J	REDRAWN W/CHANGE NOR G7S2012/87-03-18	90-10-23	HJS

NOTES:

1. FOR WROUGHT MATERIAL: STEEL, CARBON SAE 1015 TO 1025: ASTM-A108.
2. FOR PRECISION CASTING: STEEL, CMPSN 1C-1020, 1C-1030, MIL-S-22141.
3. CLASSIFICATION AND INSPECTION OF INVESTMENT CASTINGS SHALL BE IN ACCORDANCE WITH CLASS 3, GRADE B, MIL-STD-2175.
4. FINISH 125/ ALL OVER.
5. MIL-W-13855 SHALL APPLY.
6. THIS INFORMATION MAY BE INSCRIBED ON PART NO. 6147114 AT ASSEMBLY.

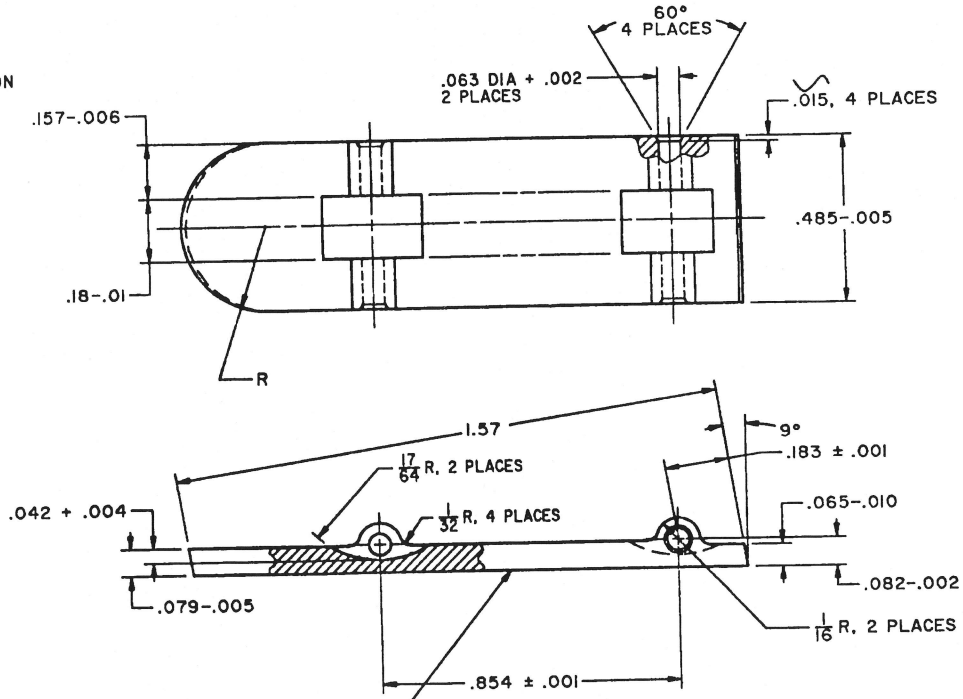

INSCRIBE THE FOLLOWING INFORMATION
.09 HIGH X .010 + .005 DEEP PER MIL-STD-130.
19200-ASSY 5508694

MFR: CODE IDENT NO. (SEE NOTE 6)

CURRENT DESIGN ACTIVITY CAGE CODE 19200
U.S. ARMY
ARMAMENT RESEARCH, DEVELOPMENT AND ENGINEERING CENTER
PICATINNY ARSENAL, NEW JERSEY 07806-5000

THIS DRAWING HAS BEEN GENERATED ON A CAD SYSTEM LOCATED AT ARDEC, PICATINNY ARSENAL, N.J. CHANGES MUST BE INCORPORATED VIA THIS SYSTEM.

PART NO. 6008606

PMIC		
MECHANICAL PROPERTIES		
YP		
TS		
EL2		
RA		
BH		
RH		
		PISTOL, M1911A1
		NATL MATCH
	B6147114	PISTOL, M1911A1
	NEXT ASSY	USED ON
	APPLICATION	

DO NOT SCALE DRAWING
UNLESS OTHERWISE SPECIFIED DIMENSIONS ARE IN INCHES
TOLERANCES ON
DECIMAL: 2 PL ± .01, 3 PL ±
FRACTION: ±1/64, ANGLES ± 1°

THIRD ANGLE PROJECTION

MATL ENGR | CADDS REV A 283

CONTRACT NUMBER
CONTRACTOR

DRAWN BY	J.J.V.	DATE(YR-MO-DA)	28-05-01
CHECKER	L.S.C.	ENGINEER	H.E.S.
DRAWING APPROVAL	V. A. LUUKKONEN		
DESIGN APPROVAL	S. C. SHULTZ		

DEPT OF THE ARMY
SPRINGFIELD ARMORY
SPRINGFIELD, MASS

BASE, MAGAZINE

SIZE	CAGE CODE	
C	19205	6008606
SCALE 4/1	UNIT WT. .016 LB	SHEET

SMCAR FORM 67, 1 DEC 87(TEMP), REPLACES SMCAR FORM 67, 1 MAR 87(TEMP), WHICH MAY BE USED UNTIL EXHAUSTED

DD FORM 1177
9 AUG 46

NOTICE: WHEN GOVERNMENT DRAWINGS, SPECIFICATIONS, OR OTHER DATA ARE USED FOR ANY PURPOSE OTHER THAN IN CONNECTION WITH A DEFINITELY RELATED GOVERNMENT PROCUREMENT OPERATION, THE UNITED STATES GOVERNMENT THEREBY INCURS NO RESPONSIBILITY NOR ANY OBLIGATION WHATSOEVER; AND THE FACT THAT THE GOVERNMENT MAY HAVE FORMULATED, FURNISHED, OR IN ANY WAY SUPPLIED THE SAID DRAWINGS, SPECIFICATIONS OR OTHER DATA IS NOT TO BE REGARDED BY IMPLICATION OR OTHERWISE AS IN ANY MANNER LICENSING THE HOLDER OR ANY OTHER PERSON OR CORPORATION, OR CONVEYING ANY RIGHTS OR PERMISSION TO MANUFACTURE, USE, OR SELL ANY PATENTED INVENTION THAT MAY IN ANY WAY BE RELATED THERETO.

REVISIONS			
SYM	DESCRIPTION	DATE	APPROVAL
5		23 MAY 69	
A	REDRAWN AND REVISED WAS "B" SIZE, SEE EO SA 26316	27 NOV 62	
B	SEE ERR HQR 20742	7 AUG 72	
C	SEE ERR HQR 30687-1	23 MAY 73	
D	SEE ERR HQR 50631	5 MAY 75	
E	NORWOS2002 81-02-26	82-01-15	

NOTES:
1 - MIL-W-13855 APPLIES.

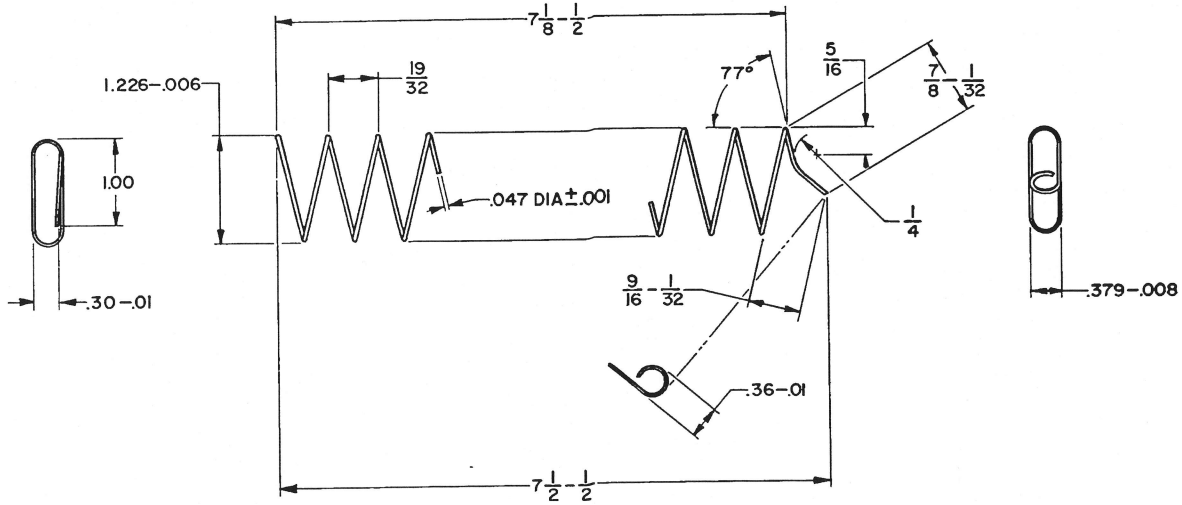

C6008607

ASSEMBLED HEIGHT ---------- 4.3
LOAD AT COMPRESSED LENGTH ----------
APPROXIMATE NUMBER OF COILS ---------- 12.5
LOAD AT COMPRESSED LENGTH
MANUFACTURE IN ACCORDANCE WITH MIL-S-13572, TYPE I, GRADE A.

U S ARMY ARMAMENT RESEARCH AND DEVELOPMENT COMMAND
DOVER, NEW JERSEY 07801

CODE IDENT NO. ~~19204~~
PART NO. 6008607

CODE IDENT NO. 19200

PHYSICAL PROPERTIES			
YP			
TS			
EL %			
RA			
BH			
RH			
		PISTOL, M911A1 NATL MATCH	
	C5508694	PISTOL, M911A1	
	B12006351	PISTOL, M15	
	NEXT ASSY	USED ON	
APPLICATION			
DO NOT -DO-	APPLY PART NO. -AS SPECIFIED-		

UNLESS OTHERWISE SPECIFIED DIMENSIONS ARE IN INCHES
TOLERANCES ON DECIMALS ±.01
ANGLES ±1° FRACTIONS ±1/64
MATERIAL: MUSIC WIRE, SPEC QQ-W-470
HEAT TREATMENT: STRESS RELIEVE AT 450° ± 20°F FOR 30 MINUTES, AFTER FORMING.
FINAL PROTECTIVE FINISH

ORIGINAL DATE OF DRAWING 1 MAY 28
DRAFTSMAN J.V. CHECKER L.S.C.
TRACER CHECKER
ENGR ENGR
SUBMITTED ORD CORPS
APPROVED BY ORDER OF THE CHIEF OF ORDNANCE LT COL ORD CORPS

SPRING, MAGAZINE

~~DEPT OF THE ARMY~~
~~ROCK ISLAND ARSENAL~~
~~ROCK ISLAND, ILL. 61201~~

SIZE C | 6008607
SCALE 1/1 | UNIT WT .02 LB | SHEET 1 OF 1

RMH

LITHO IN U.S.A. REQUIRE NO ASSIGNMENT